Symétrie

Positioning hexapods catalog

Welcome

Welcome to SYMETRIE! In browsing this catalogue, you will find the best possible positioning solutions to cater to your demanding applications.

Always looking to increase the performance of our hexapods, our growing team works hand in hand to integrate the latest available technology.

This is why SYMETRIE is first and foremost a R&D company. Thanks to our experience providing hexapods for industry and research laboratories, we will be able to quickly answer your needs.

Olivier Lapierre & Thierry Roux
Co-founders, CEO & CTO

Contents

SYMETRIE company

Design department

SYMETRIE's engineering office consists of mechanical, electronics and software engineers. Our R&D department is continuously seeking for improvement, with a major effort on control software.

Workshops

All our hexapods and controllers are assembled in our mechanical and electronics workshops using standardized procedures.

Clean room

In our ISO 7 (class 10000) clean room, we mount the hexapods for applications, which are sensible to environmental contamination, such as optics, space or particle accelerators. In a clean room the concentration of particles is controlled and minimized.

Metrology laboratory

To demonstrate high precision performances, SYMETRIE is equipped with a wide range of metrology tools: laser interferometers, laser trackers, coordinate measuring machine (CMM), electronic inclinometers, capacitive sensors, accelerometers.

A promising experience and vision

SYMETRIE's trusted R&D skills led to the birth of the positioning and motion hexapods

SYMETRIE was created in 2001 with the hexapod technology as a baseline. This innovative system was quickly spotted by the highest research institutions which asked SYMETRIE for a high precision hexapod to position the target of the MegaJoule Laser, a high energy inertial confinement fusion device in France.

The following contracts, still more ambitious, trusted the company to add dynamic motion capabilities to its hexapods systems. SYMETRIE succeeded once again in delivering up to 1g acceleration to slosh 10 ton liquid gas tanks for maritime transportation.
The acquired experience and trust built among a nascent network of customers were the beginning of an involvement in a wide array of technological projects, such as the Gaia satellite and the James Webb Space Telescope among others.

Innovation is a key factor of our development. Our R&D department works every day to improve our technologies and control systems using the latest generation components and techniques for higher quality products.

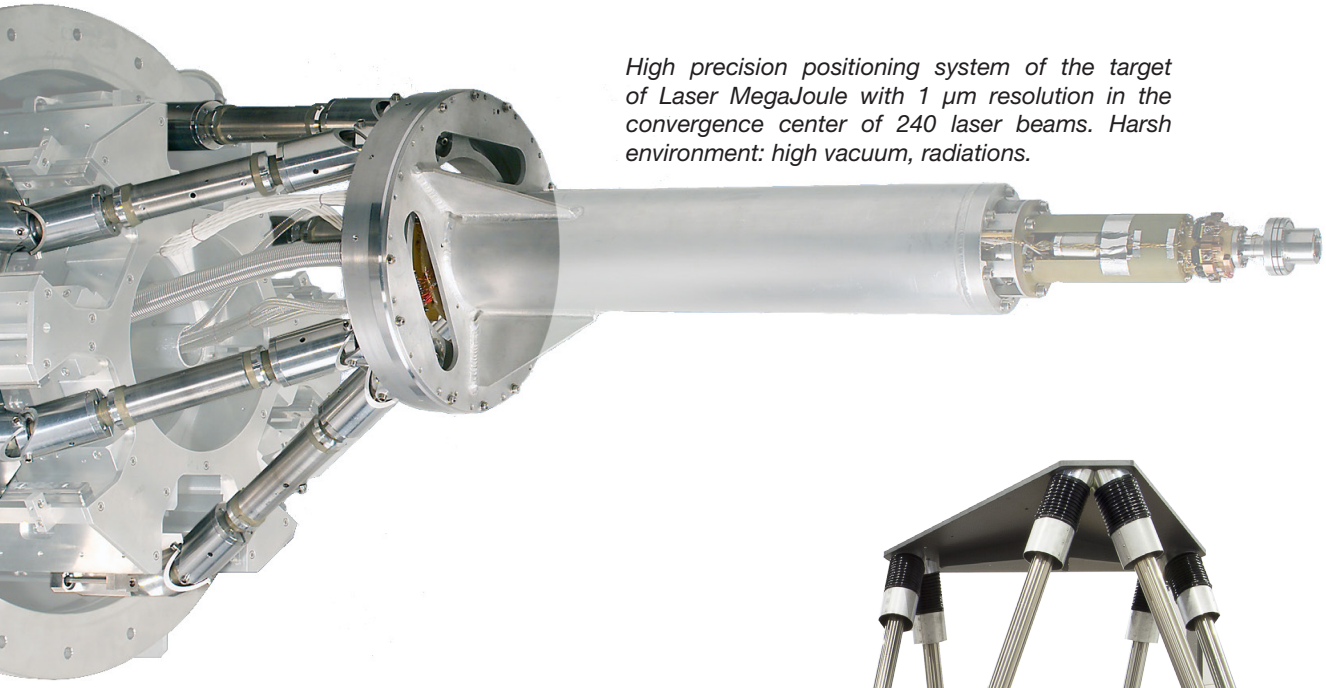

High precision positioning system of the target of Laser MegaJoule with 1 µm resolution in the convergence center of 240 laser beams. Harsh environment: high vacuum, radiations.

A 4 meter tall swell simulation hexapod with up to 10 ton payload, 1 m/s speed and 1 g acceleration.

From standard hexapods to custom designs

To cater to your needs in the smoothest way, SYMETRIE offers a range of turnkey hexapods.

- Better price and lead time: We look forward to offering hexapods which have already been designed.
- Ease project definition: Offering **a coherent range** where the hexapods differentiate between each other with unique features allows you to easier select and understand the capabilities that you will get.

SYMETRIE remains a trustworthy designer for customized solutions and can provide custom designs in a short time thanks to an in-house software enabling to quickly create a hexapod geometry with respect to the customer's input parameters.

With more than 15 years hexapod background, SYMETRIE is experienced in choosing and using the most adapted technologies in terms of motors, encoders, joints… according to the customer's application.

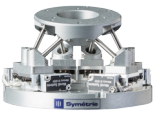

NanoPos

BORA

PUNA

BREVA

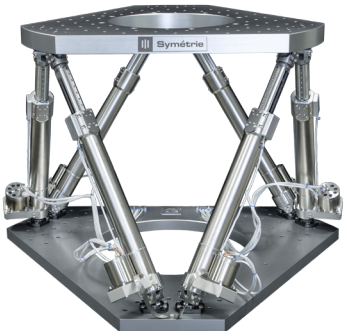

ZONDA

•••

Our roots: metrology specialists with innovative minds

The two co-founders of SYMETRIE, Olivier Lapierre and Thierry Roux, were previously working for LNE, the French national metrology and testing laboratory. Specialized in **dimensional metrology**, they were looking for an innovative and efficient 6 DOF measurement system to quickly calibrate machine-tools and thought of the hexapod as a perfect solution.

This idea led them to create SYMETRIE to develop high precision hexapods as well as other complementary activities in the metrology and positioning fields:

- 3D metrology services on customers' sites to calibrate their machine-tools or measure 3D parts and assemblies with laser interferometers, laser trackers and other metrology devices.
- Distribution of high precision electronic levels (inclinometers) and piezo stages.

These activities, which have made the hexapod vision become true are still thriving today. The dimensional metrology grain remains running through the veins of SYMETRIE at each one of its footsteps. Thanks to an experienced metrology staff, SYMETRIE knows how to qualify and test the hexapods before delivery to validate conformity.

Hexapod technology

6 Degrees Of Freedom

A hexapod is a parallel kinematic structure composed of a mobile platform linked to a fixed platform with 6 actuators.

This design allows to move an object placed on the mobile platform with 6 DOF (Degrees Of Freedom). In other words, the hexapod can move an object along the 3 translations (Tx, Ty, Tz) and the 3 rotations (Rx, Ry, Rz); any combination is possible.

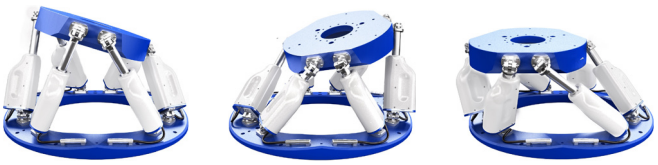

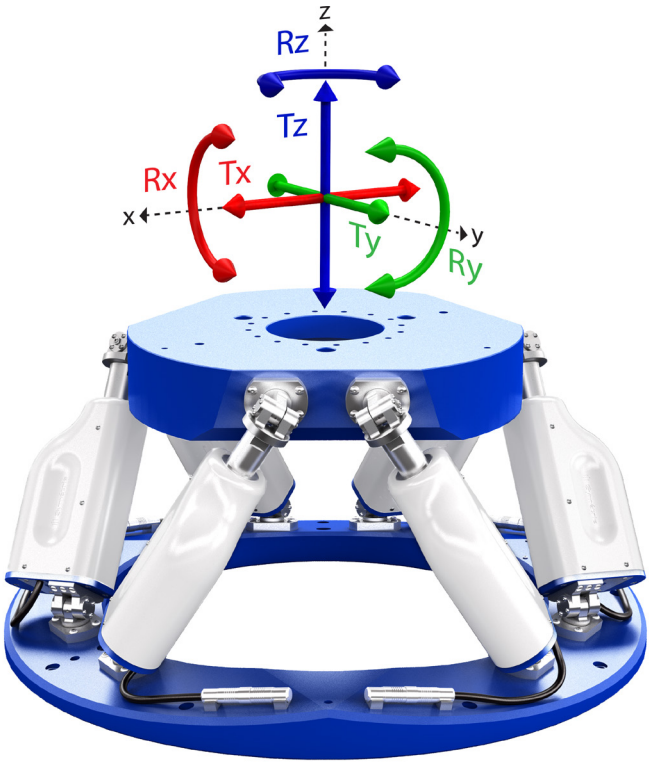

A scalable solution

Environment

- Vacuum (down to 10^{-9} mbar)
- Clean room

Payload

- From few grams to several tons
- Any orientation available

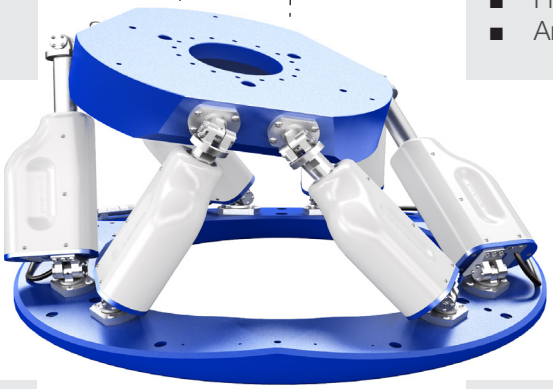

Performances

- Resolution
- Repeatability
- Accuracy
- Stiffness
- Stability
- Speed

Workspace

- From few µm to several hundred mm
- From few µrad to 45°

Workspace

A workspace defines all reachable positions of the mobile platform for specified degrees of freedom. An infinity of workspaces exists depending on which DOF are set to be swept and which DOF are set to be constant among Tx, Ty, Tz, Rx, Ry, Rz.

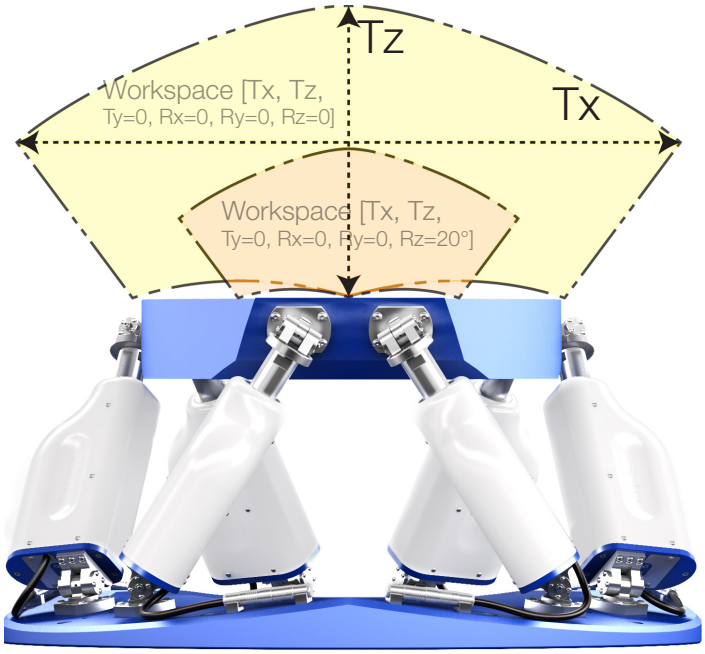

Example of two workspaces:

- In yellow, the workspace [Tx=swept, Tz=swept, Ty=0, Rx=0, Ry=0, Rz=0].
- In orange, the workspace [Tx=swept, Tz=swept, Ty=0, Rx=0, Ry=0, Rz=20°].

The orange workspace is smaller than the yellow workspace because the Rz rotation requires extra actuators' length.

Configurable pivot point

In order to orientate the mobile platform in the desired way, a 3D rotation center has to be defined. This point is not limited to the center of the mobile platform and can be placed wherever the user needs it to be.

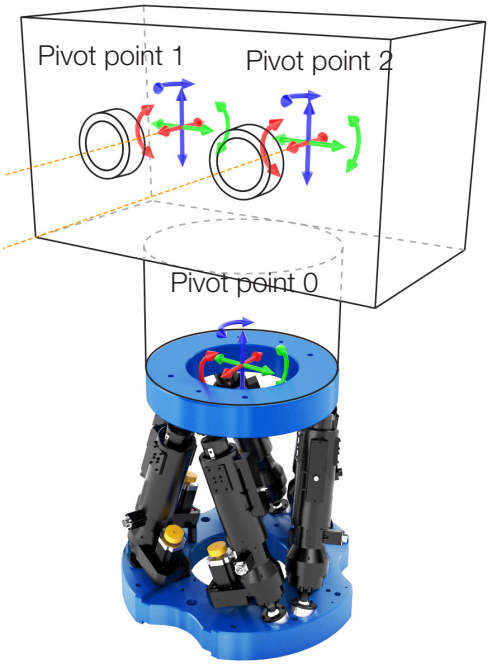

Hexapod designed and built for MAX IV Laboratory synchrotron. Special rotation centers have been defined to adjust easily a polarimeter with respect to the beam position.

Vacuum environment

A vacuum environment is a space empty of matter. The perfect vacuum is an ideal concept and cannot be practically attained. However, it is possible to approach this ideal in laboratory in decreasing the pressure of a system. Indeed, lower is the pressure of a system, closer it is to the perfect vacuum.

At SYMETRIE, we provide hexapods that are designed to operate in such environments. Regarding vacuum projects we take a particular care during assembly and select specific materials and treatment such as:

- Vacuum compatible motor, ball screw, encoder
- Vacuum compatible lubrification
- Use of Teflon or Kapton cables
- Specific roughness of parts
- All holes are vented
- Specific cleaning of parts in an ultrasonic bath

For each hexapod in this catalogue, we can implement vacuum options to cater to your specific needs:

- Low Vacuum Option (10^{-3} mbar)
- High Vacuum Option (10^{-6} mbar)
- Ultra High Vacuum Option (10^{-9} mbar) upon request

BORA hexapod for 10^{-6} mbar vacuum

Custom ZONDA hexapod for 10^{-3} mbar vacuum

Custom ZONDA hexapod + Z stage for 10^{-6} mbar vacuum

ZONDA hexapod for 10^{-6} mbar vacuum

Overview of the product range

	Name	Payload	Linear travel range	Angular travel range	Linear / Angular resolution	Height
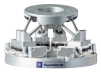	**NanoPos**	500 g	± 5 mm	± 10°	10 nm / 1 µrad	68 mm
	**BORA**	10 kg	± 20 mm	± 15°	0.1 µm / 2 µrad	145 mm
	**PUNA**	25 kg	± 30 mm	± 20°	0.5 µm / 5 µrad	200 mm
	**BREVA**	25 kg / 200 kg	± 75 mm	± 22°	0.5 µm / 2.5 µrad	350 mm
	**ZONDA**	400 kg	± 200 mm	± 20°	0.1 µm / 0.5 µrad	640 mm
	**SIRIUS**	200 kg	± 150 mm	± 20°	5 µm / 10 µrad	750 mm
	**KUBAN**	500 kg	± 25 mm	± 3°	0.2 µm / 1.5 µrad	600 mm
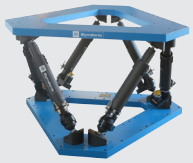	**JORAN**	1 500 kg	± 65 mm	± 3°	0.1 µm / 0.5 µrad	800 mm
	**SURES**	500 kg	± 8 mm	± 1°	0.1 µm / 1.5 µrad	360 mm

NanoPos hexapod

Nanometer resolution miniature hexapod

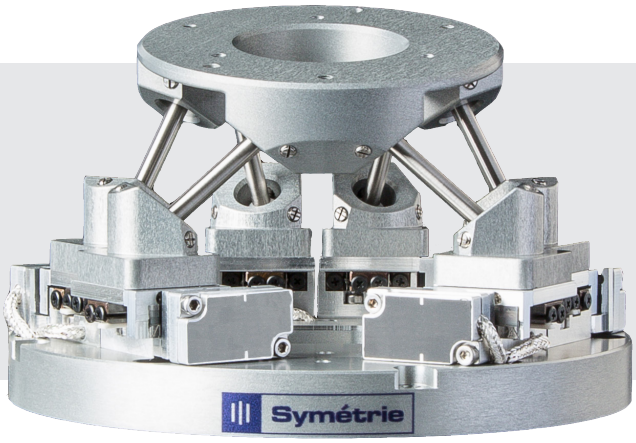

KEY FEATURES

- Payload capacity up to 500 g
- Linear resolution 10 nm
- Angular resolution 1 µrad
- Height in middle position 68 mm

APPLICATIONS

- Instrumentation
- Synchrotrons
- Optics
- Microscopy
- Testing laboratories
- Nanotechnologies
- Semiconductors

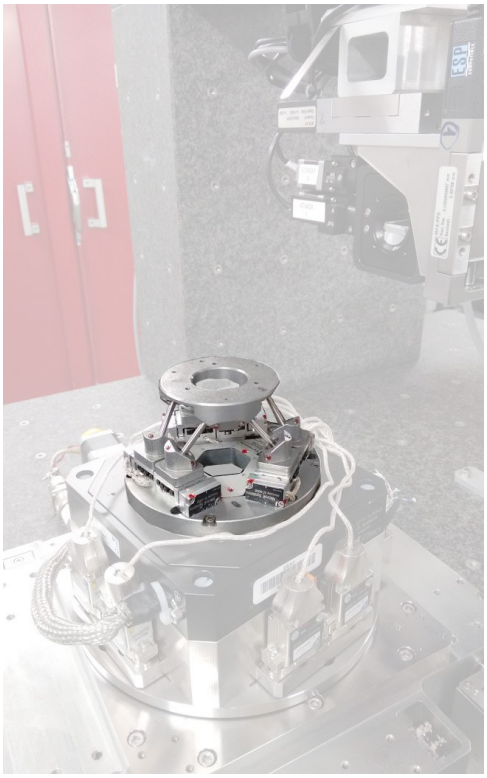

NanoPos hexapod is positioning a sample on ID11 new Nanoscope station of ESRF synchrotron. ID11 is a beamline dedicated to moderate to high energy diffraction and/or imaging studies of a variety of systems of interest for their physical, mechanical, or chemical properties.

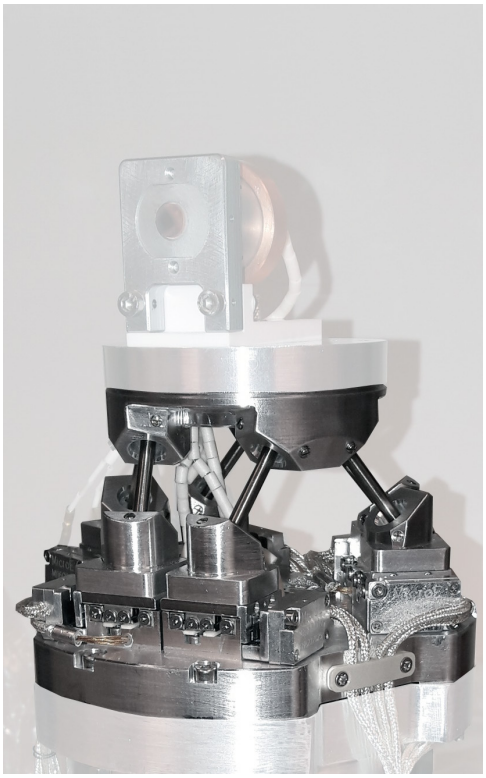

A UHV compatible NanoPos is positioning a sample in a 10-9 mbar chamber for experiments at the University of Stockholm.

	NanoPos
Motion and positioning	
Travel range Tx, Ty (mm)	± 5
Travel range Tz (mm)	± 4
Travel range Rx, Ry (deg)	± 7
Travel range Rz (deg)	± 10
Resolution Tx, Ty, Tz (nm)	10
Resolution Rx, Ry, Rz (µrad)	1
Repeatability Tx, Ty, Tz (nm)	± 75
Repeatability Rx, Ry, Rz (µrad)	± 2
Speed (mm/s; deg/s)	1; 1
Mechanical properties	
Payload capacity (g) (vertical orientation)	500
Motor type	Piezo motor
Miscellaneous	
Operating temperature range (°C)	+ 5 to + 40
Materials	Aluminum, invar, ceramic, stainless steel
Size mobile platform (mm)	Ø 72
Central aperture (mm)	Ø 32
Height in middle position (mm)	68
Mass (g)	505
Cable length (m)	1.2
Options	Customized platform design Larger travel range Scalable size Vacuum compatibility Non magnetic
Controller	
Controller type	CAPELLA
Interface	Ethernet, USB, Serial (RS-232)
Power supply	110-240 VAC / 50-60 Hz

The performances are specified for single axis motions, with all other axes at midrange and for a rotation center in the middle of the mobile platform.

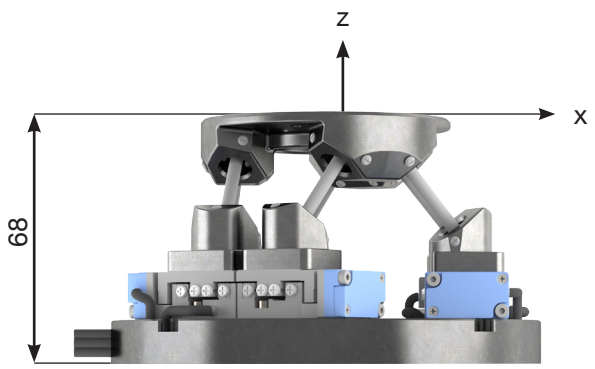

Hexapod in middle position

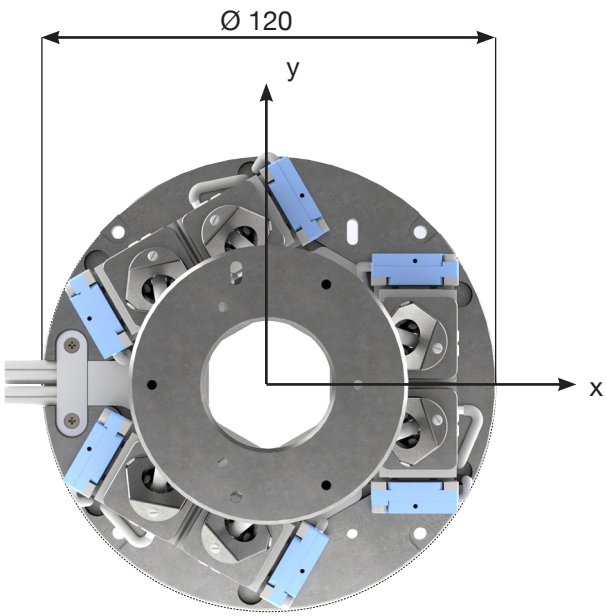

BORA hexapod

High resolution hexapod small size

KEY FEATURES

- Payload capacity up to 10 kg
- Linear travel range ± 20 mm
- Angular travel range ± 15 °
- Height in middle position 145 mm

APPLICATIONS

- Instrumentation
- Aeronautics and spatial
- Optics
- Metrology
- Testing laboratories
- Semiconductors
- Synchrotrons

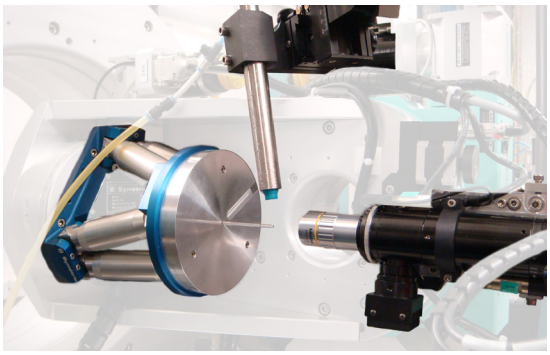

This hexapod places a sample at the centre of two large rotation stages. With this installation, hexapod mounting orientation varies between 0° and 90°. Advantages of the hexapod are: high stability, stiffness and repeatability of the sample position with respect to the rotation stages independently of their orientations.

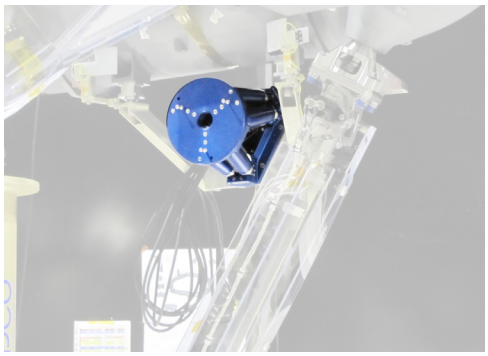

Alignment of a mirror with high precision on a space telescope. When the hexapod has correctly positioned the mirror, the user fixes the mirror and takes the hexapod off the structure.

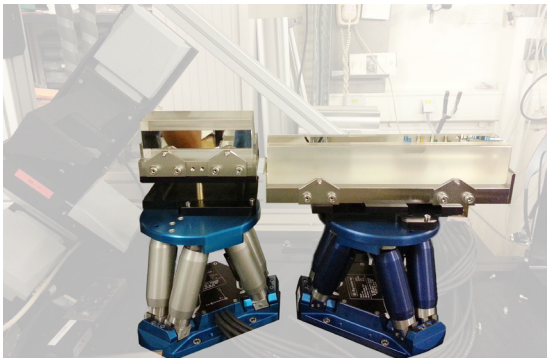

Two BORA hexapods position Kirkpatrick-Baez (KB) mirrors with high stability and resolution to improve the beam quality on a synchrotron beamline.

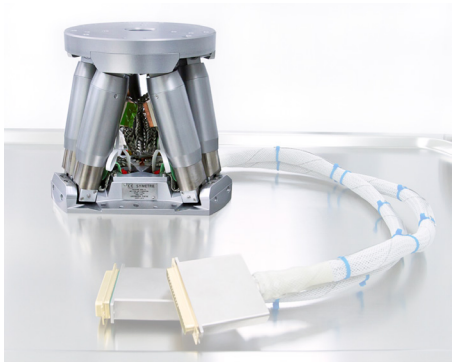

10^{-6} mbar vacuum version to align a mirror on a satellite in a vacuum chamber during mounting and testing phases.

	BORA
Motion and positioning	
Travel range Tx, Ty (mm)	± 20
Travel range Tz (mm)	± 10
Travel range Rx, Ry (deg)	± 10
Travel range Rz (deg)	± 15
Resolution Tx, Ty, Tz (µm)	0.1
Resolution Rx, Ry, Rz (µrad)	2
Repeatability Tx, Ty, Tz (µm)	± 1.5
Repeatability Rx, Ry, Rz (µrad)	± 6.5
Speed (mm/s; deg/s)	2; 2
Mechanical properties	
Stiffness X, Y (N/µm)	1
Stiffness Z (N/µm)	10
Payload capacity (kg) (vertical orientation / horizontal orientation)	10 / 5
Motor type	DC motor, gearhead
Miscellaneous	
Operating temperature range (°C)	0 to + 50
Materials	Aluminum, steel, stainless steel
Size mobile platform (mm)	Ø 160
Central aperture (mm)	Ø 43 for mobile platform ; Ø 36 for fixed platform
Height in middle position (mm)	145
Mass (kg)	4.3
Cable length (m)	3
Options	Clean room compatibility Low temperature compatibility down to -40°C Vacuum compatibility
Controller	
Controller type	ALPHA
Interface	Ethernet, USB
Power supply	110-240 VAC / 50-60 Hz

The performances are specified for single axis motions, with all other axes at midrange and for a rotation center in the middle of the mobile platform.

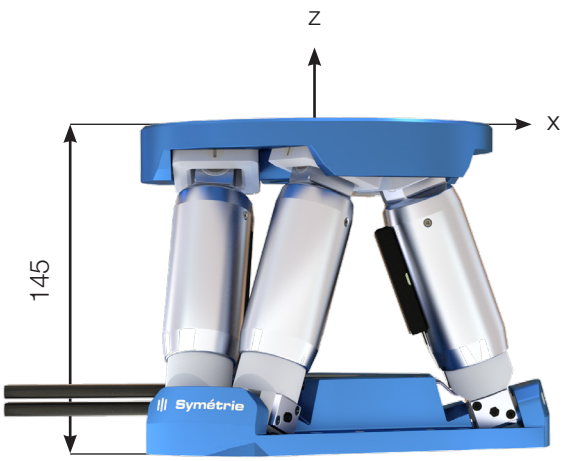

Hexapod in middle position

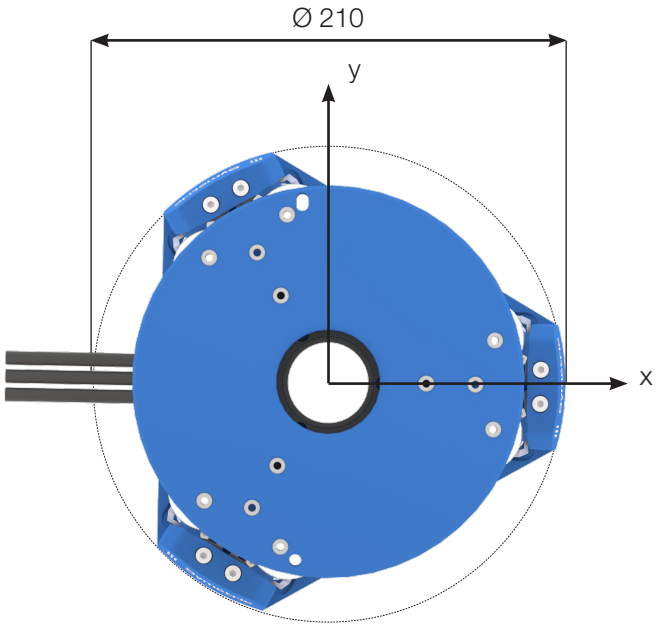

PUNA hexapod

Simple and affordable hexapod

KEY FEATURES

- Payload capacity up to 25 kg
- Resolution 0.5 µm
- Linear travel range ± 30 mm
- Height in middle position 200 mm

APPLICATIONS

- Instrumentation
- Aeronautics and spatial
- Optics
- Metrology
- Testing laboratories
- Semiconductors
- Synchrotrons
- Automotive

PUNA hexapod in motion

	PUNA
Motion and positioning	
Travel range Tx, Ty (mm)	± 30
Travel range Tz (mm)	± 20
Travel range Rx, Ry (deg)	± 11
Travel range Rz (deg)	± 20
Resolution Tx, Ty, Tz (µm)	0.5
Resolution Rx, Ry, Rz (µrad)	5
Repeatability Tx, Ty, Tz (µm)	± 1.5
Repeatability Rx, Ry, Rz (µrad)	± 6.5
Speed Tx, Ty (mm/s)	3
Speed Tz (mm/s)	1.25
Mechanical properties	
Stiffness X, Y (N/µm)	1.75
Stiffness Z (N/µm)	30
Payload capacity (kg) (vertical orientation / horizontal orientation)	25 / upon request
Motor type	DC
Miscellaneous	
Operating temperature range (°C)	0 to + 50
Materials	Aluminum, steel, stainless steel
Size mobile platform (mm)	Ø 250
Central aperture (mm)	Ø 100
Height in middle position (mm)	200
Mass (kg)	5.6
Cable length (m)	3
Options	Clean room compatibility
Controller	
Controller type	ALPHA
Interface	Ethernet, USB
Power supply	110-240 VAC / 50-60 Hz

The performances are specified for single axis motions, with all other axes at midrange and for a rotation center in the middle of the mobile platform.

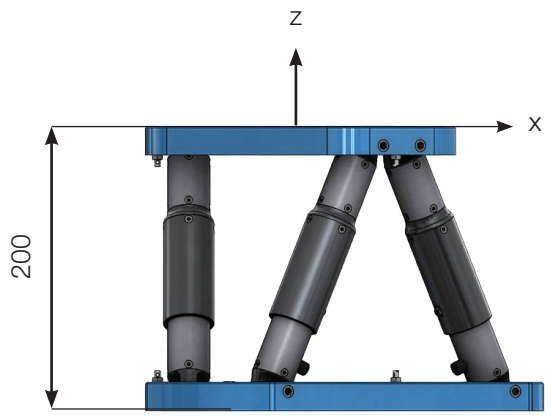

Hexapod in middle position

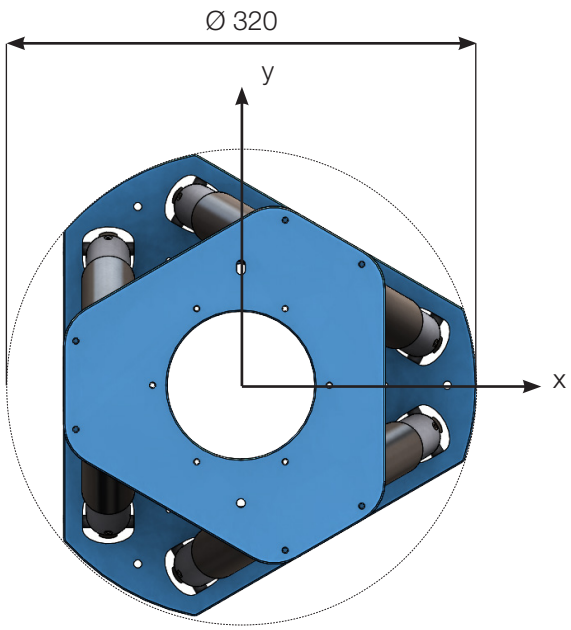

BREVA hexapod

High resolution hexapod medium size

KEY FEATURES

- Payload capacity up to 200 kg
- Linear travel range ± 75 mm
- Angular travel range ± 22 °

APPLICATIONS

- Instrumentation
- Aeronautics and space
- Optics
- Metrology
- Testing laboratories
- Synchrotrons

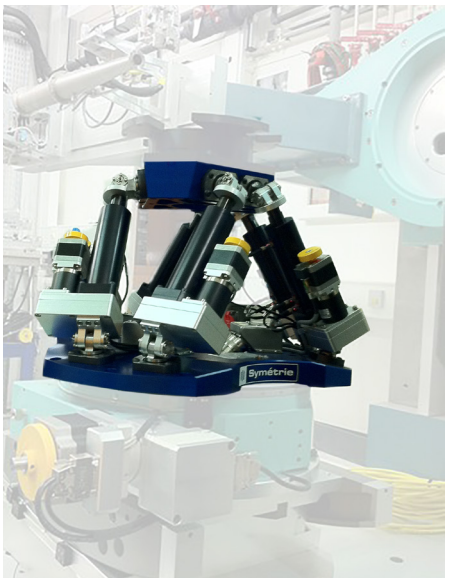

This hexapod positions a vacuum chamber containing a gas sample and offers a ± 20° angular range.

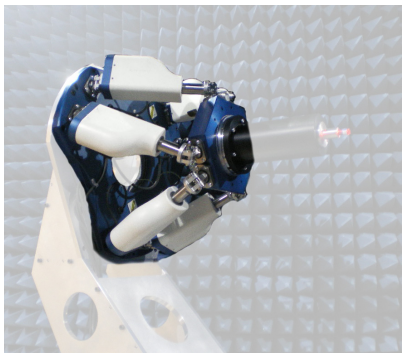

This hexapod integrates a 360° rotation in its mobile platform. It orientates a microwave source to qualify microwave antennas.

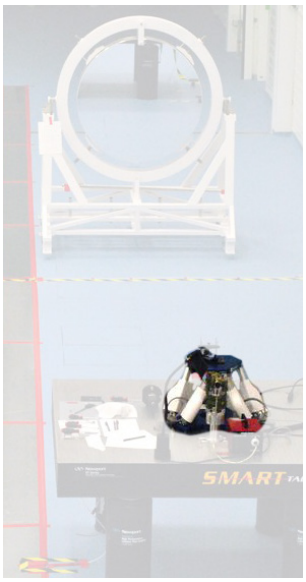

The BREVA hexapod is part of the ESA Star Tiger-2 test set-up to simulate a way to eclipse the Sun in space with two satellites flying in tight formation.

	BREVA DC	BREVA ST	BREVA BL
	for lighter payload	for higher payload	for higher speed and payload
Motion and positioning			
Travel range Tx, Ty (mm)	± 75	± 75	± 75
Travel range Tz (mm)	± 50	± 50	± 50
Travel range Rx, Ry (deg)	± 20	± 20	± 20
Travel range Rz (deg)	± 22	± 22	± 22
Resolution Tx, Ty, Tz (µm)	0.5	0.5	0.5
Resolution Rx, Ry, Rz (µrad)	2.5	2.5	2.5
Repeatability Tx, Ty, Tz (µm)	± 1	± 1	± 1
Repeatability Rx, Ry, Rz (µrad)	± 5	± 5	± 5
Speed (mm/s; deg/s)	8; 2.5	0.8; 0.25	3; 1
Mechanical properties			
Stiffness X, Y (N/µm)	5	5	5
Stiffness Z (N/µm)	32	32	32
Payload capacity (kg) (vertical orientation / horizontal orientation)	25 / 10	200 / 80	200 / 80
Motor type	DC motor, gearhead	Stepper motor, gearhead	Brushless motor, gearhead
Miscellaneous			
Operating temperature range (°C)	0 to + 50	0 to + 50	0 to + 50
Material	Aluminum, steel, stainless steel, plastic	Aluminum, steel, stainless steel, plastic	Aluminum, steel, stainless steel, plastic
Size mobile platform (mm)	Ø 289	Ø 289	Ø 289
Central aperture (mm)	Ø120	Ø120	Ø120
Height in middle position (mm)	350	350	350
Mass (kg)	32	36	36
Cable length (m)	3	3	3
Options	Absolute encoders Clean room compatibility Vacuum compatibility Customized platform design		
Controller			
Controller type	ALPHA		
Interface	Ethernet, USB		
Power supply	110-240 VAC / 50-60 Hz		

The performances are specified for single axis motions, with all other axes at midrange and for a rotation center in the middle of the mobile platform.

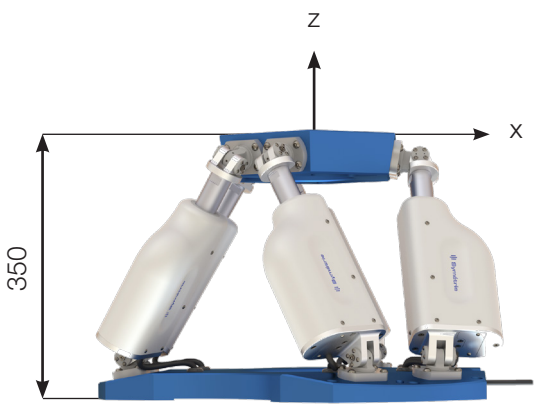

Hexapod in middle position

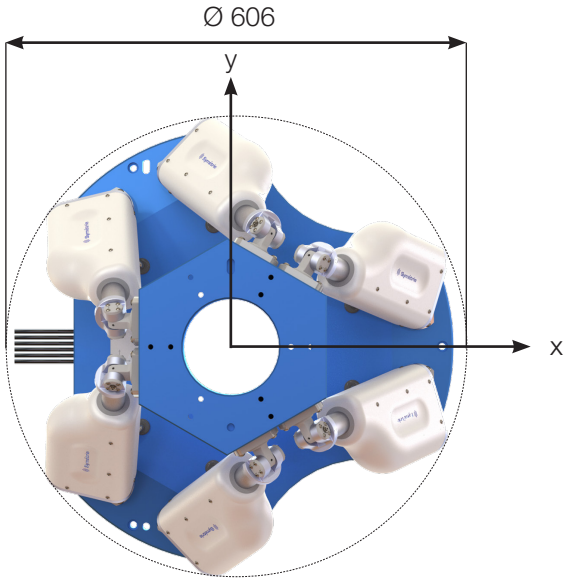

ZONDA hexapod

Very stable hexapod with high precision

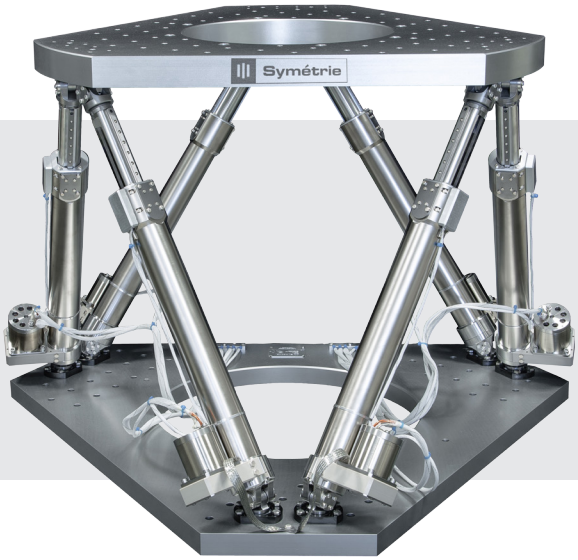

KEY FEATURES

- Very high stability
- Resolution 0.1 µm
- Payload capacity up to 400 kg
- Vacuum compatibility
- Large travel ranges

APPLICATIONS

- Synchrotrons
- Tests laboratories
- Metrology
- Aeronautics and space
- Optics
- Semiconductors
- Instrumentation

A vacuum compatible ZONDA hexapod is used at CSL to calibrate space optical instruments.

ISO5 clean room compatible hexapod to test space optical instruments for MTG (Meteosat Third Generation) satellites at BERTIN Technologies.

	ZONDA
Motion and positioning	
Travel range Tx, Ty (mm)	± 200
Travel range Tz (mm)	± 150
Travel range Rx, Ry, Rz (deg)	± 20
Resolution Tx, Ty, Tz (µm)	0.1
Resolution Rx, Ry, Rz (µrad)	0.5
Repeatability Tx, Ty, Tz (µm)	± 0.5
Repeatability Rx, Ry, Rz (µrad)	± 2
Speed (mm/s; deg/s)	0.6; 0.04
Mechanical properties	
Stiffness X, Y (N/µm)	8.5
Stiffness Z (N/µm)	30
Payload capacity (kg) (vertical orientation / horizontal orientation)	400 / 140
Motor type	Stepper
Encoder type	Absolute linear encoder
Miscellaneous	
Operating temperature range (°C)	0 to + 75
Materials	Aluminum, stainless steel, Invar, Peek
Size mobile platform (mm)	Ø 720
Height in middle position (mm)	640
Mass (kg)	99
Cable length (m)	< 5
Options	Clean room compatibility Vacuum compatibility Customized platform design
Controller	
Controller type	ALPHA
Interface	Ethernet, USB
Power supply	110-240 VAC / 50-60 Hz

The performances are specified for single axis motions, with all other axes at midrange and for a rotation center in the middle of the mobile platform.

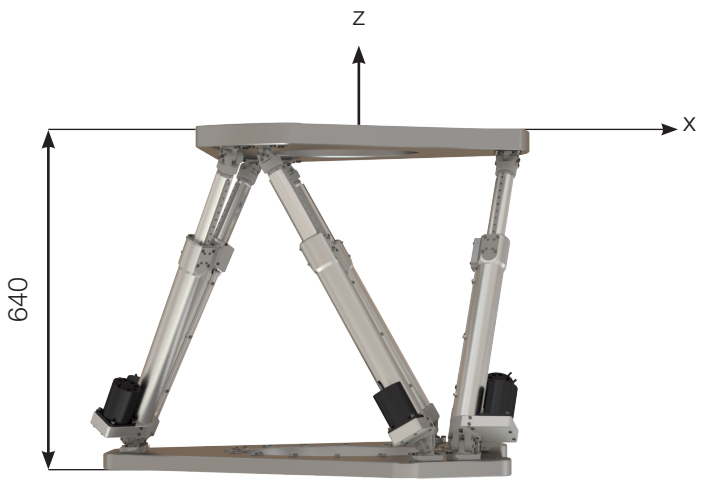

Hexapod in middle position

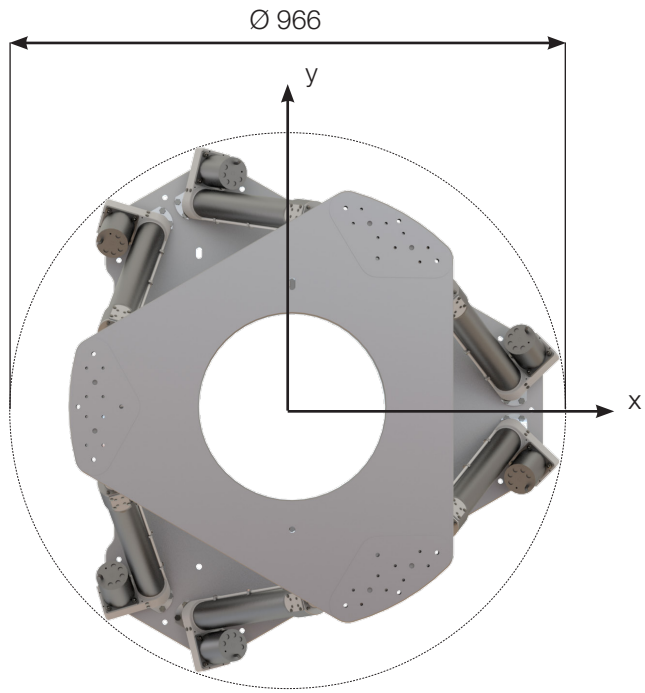

SIRIUS hexapod

High resolution hexapod large size

KEY FEATURES

- Payload capacity up to 200 kg
- Linear travel range ± 100 mm
- Angular travel range ± 20 °

APPLICATIONS

- High precision positioning
- Optical adjustment
- Antenna qualification

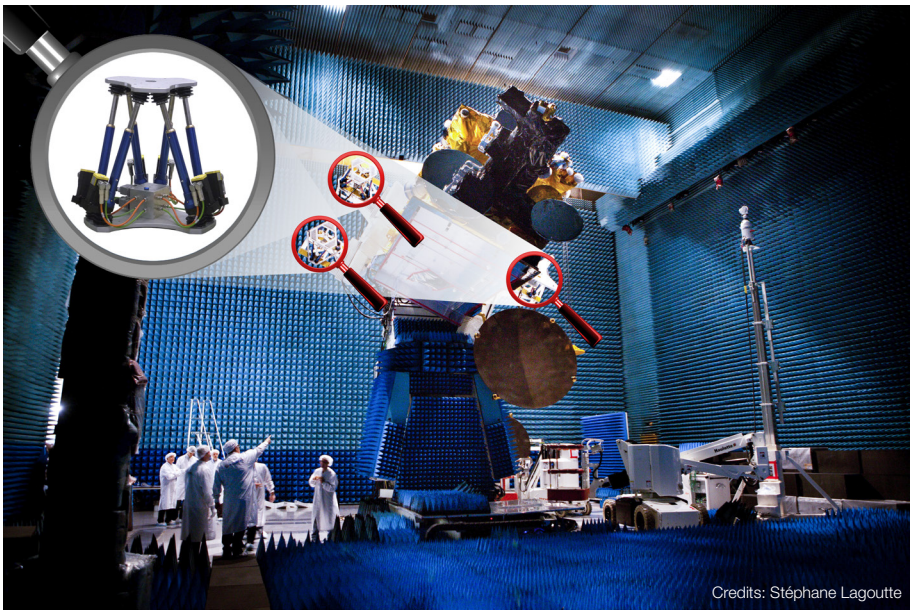

Four SIRIUS hexapods orientate the antennas of telecommunication satellite to test their performances before the launch. Thanks to the flexibility and pivot point configuration of these hexapods, this set up is adaptable to different satellite models.

This customized hexapod with extra travel range enables the qualification of space optical instruments. Hexapod height in middle position: 1400 mm / Payload: 200 kg.

	SIRIUS
Motion and positioning	
Travel range Tx, Ty (mm)	± 150
Travel range Tz (mm)	± 100
Travel range Rx, Ry, Rz (deg)	± 20
Resolution Tx, Ty, Tz (µm)	5
Resolution Rx, Ry, Rz (µrad)	10
Repeatability Tx, Ty (µm)	± 6
Repeatability Tz (µm)	± 4
Repeatability Rx, Ry (µrad)	± 20
Repeatability Rz (µrad)	± 35
Speed (mm/s; deg/s)	8; 2.5
Mechanical properties	
Payload capacity (kg) (vertical orientation / horizontal orientation)	200 / 80
Motor type	Brushless motor with absolute encoder
Miscellaneous	
Operating temperature range (°C)	0 to + 50
Materials	Aluminum, steel, stainless steel
Size mobile platform (mm)	Ø 520
Height in middle position (mm)	750
Mass (kg)	82
Cable length (m)	5
Options	Clean room compatibility Vacuum compatibility Customized platform design
Controller	
Controller type	VEGA
Interface	Ethernet, USB
Power supply	110-240 VAC or 400 VAC (three-phase) / 50-60 Hz

The performances are specified for single axis motions, with all other axes at midrange and for a rotation center in the middle of the mobile platform.

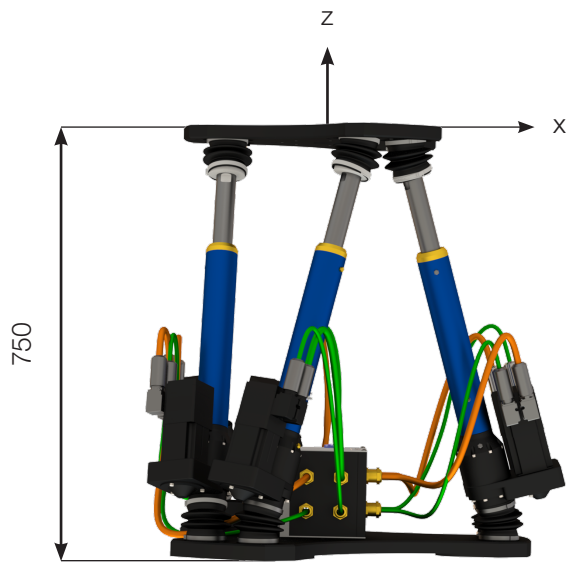

Hexapod in middle position

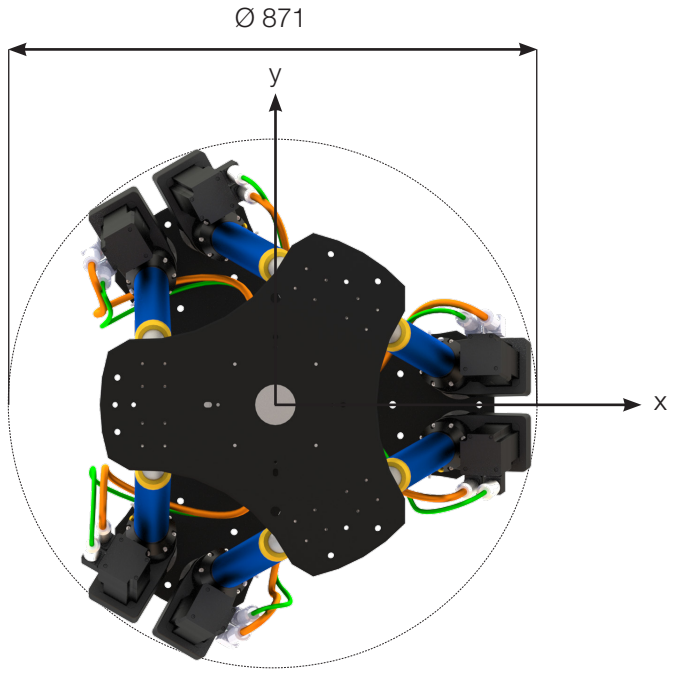

KUBAN hexapod

High resolution heavy payload medium size

KEY FEATURES

- Height 600 mm
- Resolution 1.5 µrad
- Repeatability ± 5 µrad
- Payload capacity up to 500 kg

APPLICATIONS

- Synchrotrons: mirror or chamber supports
- Optics

KUBAN hexapod positions a mirror inside of a vacuum chamber with high resolution. To be sure to avoid harming any part due to an unexpected over range, an inclination limit switch is installed under the hexapod mobile platform and stops the motion if the maximum roll angle is reached.

KUBAN hexapod aligns a polarimeter with high precision in a short time. This installation made by TOYAMA can be moved to be used on different beamlines at MAX IV Laboratory synchrotron.

	KUBAN
Motion and positioning	
Travel range Tx, Ty, Tz (mm)	± 25
Travel range Rx, Ry (deg)	± 2
Travel range Rz (deg)	± 3
Resolution Tx, Ty (µm)	0.2
Resolution Tz (µm)	0.1
Resolution Rx, Ry (µrad)	1.5
Resolution Rz (µrad)	2
Repeatability Tx, Ty (µm)	± 1
Repeatability Tz (µm)	± 0.5
Repeatability Rx, Ry (µrad)	± 5
Repeatability Rz (µrad)	± 8
Speed (mm/sec; deg/sec)	0.25; 0.05
Mechanical properties	
Payload capacity (kg)	500
Motor type	Stepper motor
Miscellaneous	
Operating temperature range (°C)	0 to + 50
Material	Aluminum, steel, stainless steel
Footprint (mm)	Ø 600
Height in middle position (mm)	600
Mass (kg)	140
Cable length (m)	5
Options	Customized platform design Absolute encoders Adjustable height Inclination limit switch
Controller	
Controller type	ALPHA
Interface	Ethernet, USB
Power supply	110-240 V AC 50-60 Hz

The performances are specified for single axis motions, with all other axes at midrange and for a rotation center in the middle of the mobile platform.

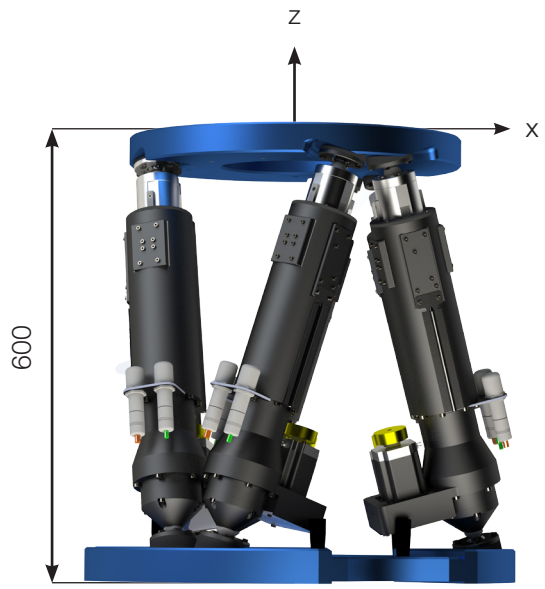

Hexapod in middle position

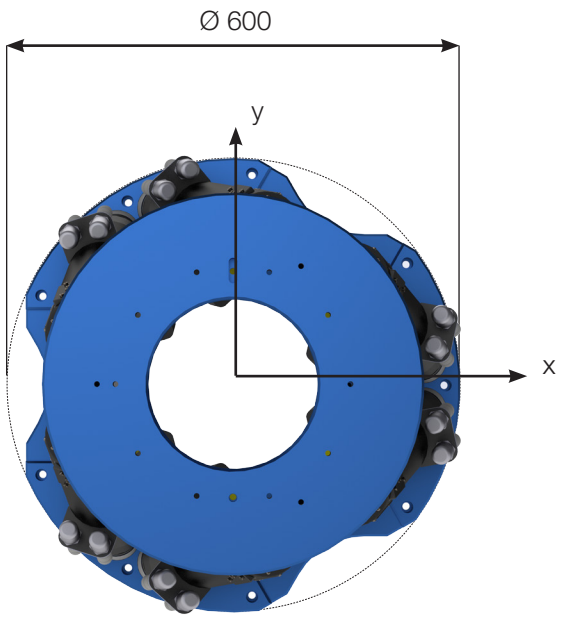

JORAN hexapod

High resolution ultra heavy payload large size

KEY FEATURES

- High stability
- Resolution 0.5 µrad
- Large payload capacity 1500 kg (more upon request)

APPLICATIONS

- Synchrotrons: mirror or chamber supports
- Optics

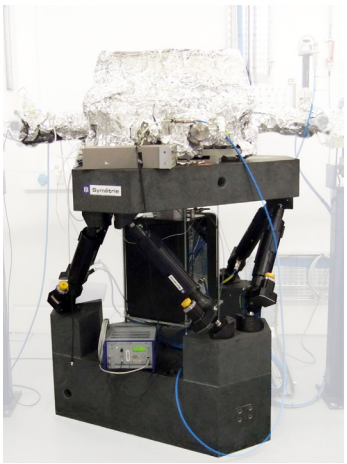

JORAN hexapod has been developed in collaboration with ESRF synchrotron to position mirrors with very high resolution.

JORAN hexapod size has been adapted to the beam height of the Australian Synchrotron.

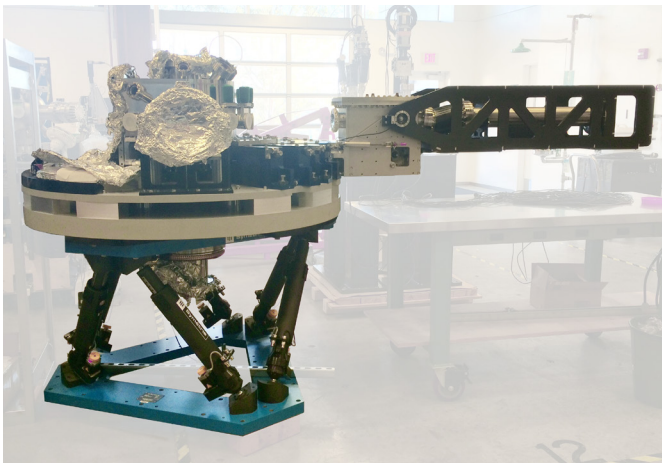

JORAN actuators at LBL are longer to enable a ± 12.5° rotation around Z. This JORAN hexapod has also been customized to support a 3.2 tons payload.

	JORAN ST	JORAN BL
	for lower speed	for higher speed
Motion and positioning		
Travel range Tx, Ty (mm)	± 65	± 65
Travel range Tz (mm)	± 50	± 50
Travel range Rx, Ry, Rz (deg)	± 3	± 3
Resolution Tx, Ty, Tz (µm)	0.1	0.1
Resolution Rx, Ry, Rz (µrad)	0.5	0.5
Repeatability Tx, Ty, Tz (µm)	± 0.5	± 0.5
Repeatability Rx, Ry, Rz (µrad)	± 2	± 2
Speed (mm/s; deg/s)	0.25; 0.05	1; 0.2
Mechanical properties		
Payload capacity (kg) (vertical orientation)	1500	1500
Motor type	Stepper motor	Brushless motor
Miscellaneous		
Operating temperature range (°C)	0 to + 50	0 to + 50
Material	Aluminum, steel, stainless steel, ceramic	Aluminum, steel, stainless steel, ceramic
Footprint (mm)	Ø 1300	Ø 1300
Height in middle position (mm)	800	800
Mass (kg)	515	515
Cable length (m)	5	5
Options	Customized platform design Absolute encoders Adjustable height Heavier payload	
Controller		
Controller type	ALPHA	
Interface	Ethernet, USB	
Power supply	110-240 VAC / 50-60 Hz	

The performances are specified for single axis motions, with all other axes at midrange and for a rotation center in the middle of the mobile platform.

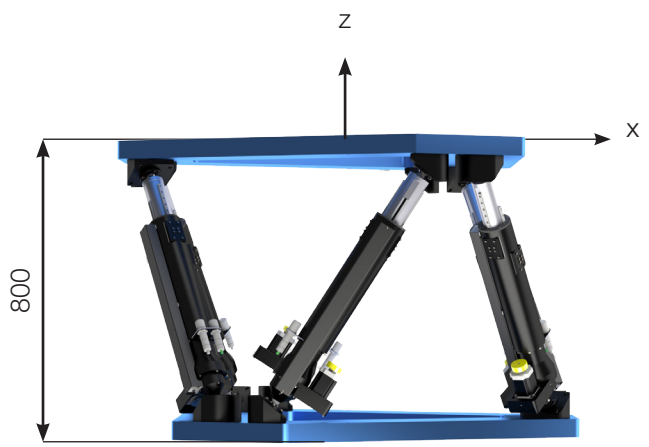

Hexapod in middle position

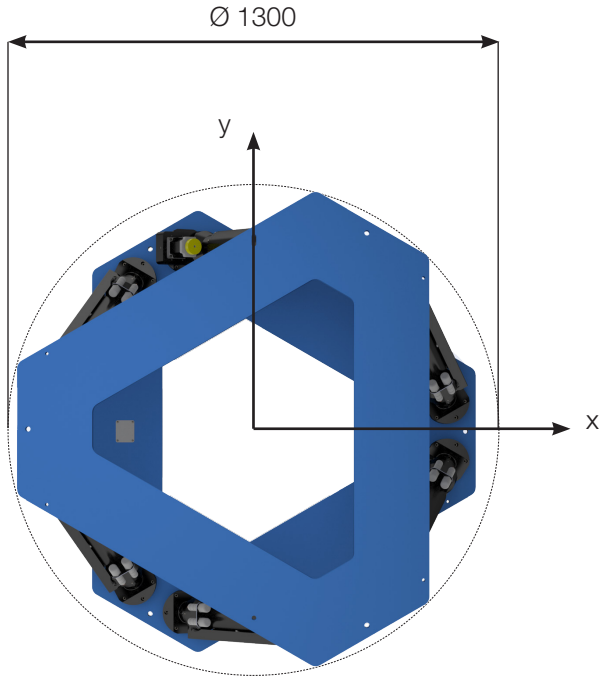

SURES hexapod

High resolution high rigidity hexapod for astronomy

KEY FEATURES

- Payload capacity up to 500 kg
- Resolution 0.1 µm
- Low cross coupling motions
- Operational in all orientation

APPLICATIONS

- Positioning of mirror of telescope
- Radio testing
- High accuracy positioning
- Antenna qualification
- Optical adjustment

SURES hexapod positions the 450 kg secondary mirror of OAJ T250 telescope in Spain with 0.35 µm linear and 0.5 arcsec angular resolutions. The SURES hexapod for OAJ has a 920 mm diameter.

ARIES telescope is installed in Nainital in India. With a primary mirror of 3.6 m diameter, it is the largest optical centre in the country. Cross-coupling of SURES hexapod is less than 0.7 arcsec in tip-tilt during centering or focus.

The hexapod is installed on Pan-STARRS-2 telescope at an altitude of 4267 m on Maui, Hawaii. A smaller version of SURES has been adapted as the secondary mirror is 600 mm diameter and weighs less than 110 kg.

	SURES
Motion and positioning	
Travel range Tx, Ty (mm)	± 8
Travel range Tz (mm)	± 6
Travel range Rx, Ry, Rz (°)	± 1
Resolution Tx, Ty, Tz (µm)	0.1
Resolution Rx, Ry, Rz (µrad)	1.5
Repeatability Tx, Ty (µm)	± 0.5
Repeatability Tz (µm)	± 0.25
Repeatability Rx, Ry, Rz (µrad)	± 1
Mechanical properties	
Payload capacity (kg) (with orientation from 0° to 90°)	up to 500
Motor type	Brushless motor with absolute encoder
Miscellaneous	
Operating temperature range (°C)	-20 to + 40
Humidity level (%)	up to 100
Materials	Aluminum, steel, stainless steel
Size mobile platform (mm)	Ø 690
Height in middle position (mm)	360
Mass (kg)	117
Cable length (m)	10 (longer on request)
Options	Customized platform design Modular external diameter
Controller	
Controller type	ALPHA custom
Interface	Ethernet, USB
Power supply	120-240 VAC / 50-60 Hz

The performances are specified for single axis motions, with all other axes at midrange and for a rotation center in the middle of the mobile platform.

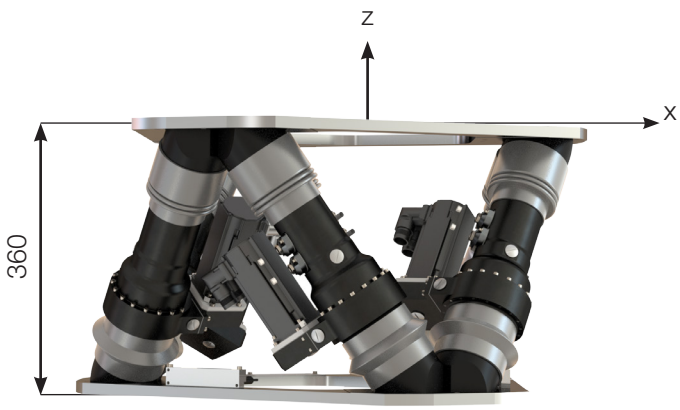

Hexapod in middle position

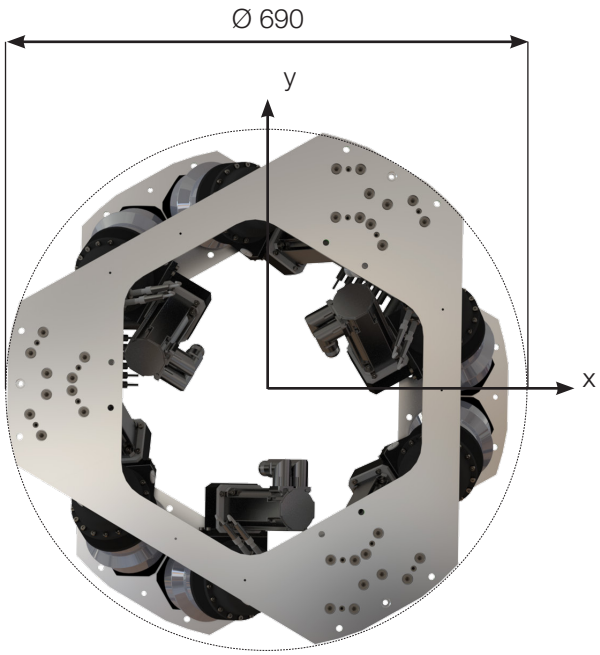

CAPELLA controller

KEY FEATURES

- Ethernet, USB or Serial (RS-232)
- General purpose inputs / outputs
- Complete control software
- Compatible with: NanoPos

Features	
Axis number	6
Motion controller	DeltaTau Clipper programmed with SYMETRIE hexapod control software
Communication	Ethernet / USB / Serial (RS-232)
Drive type	Micronix piezo drivers
Encoder input	Incremental differential signals (RS-422)
Connectors	6x D-sub 15 pins
GPIO	2 outputs & 1 input optically isolated (D-sub 9 pins)
Miscellanous	
Voltage	110-240 VAC / 50-60 Hz
Power	< 500 W (4A internal fuse)
Dimensions	Height (H) / Width (B) / Depth (T) (see figure below), 132.55 mm (3U) / 448.90 mm (84F) / 435.5 mm
Mass	~ 10 kg
Operating temperature	0 °C to + 45 °C
Storage temperature	- 25 °C to + 70 °C

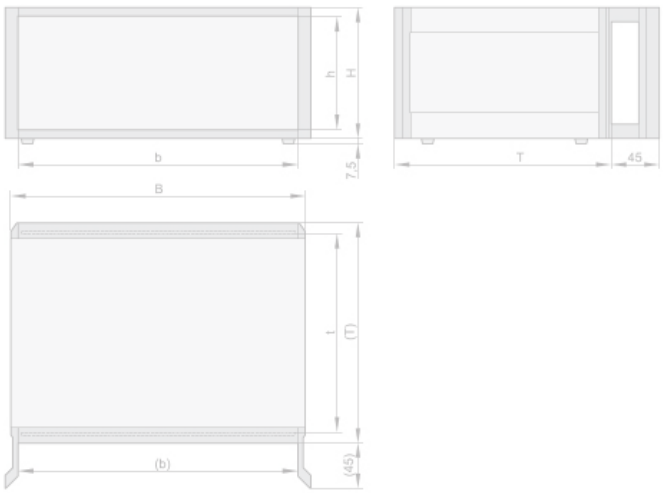

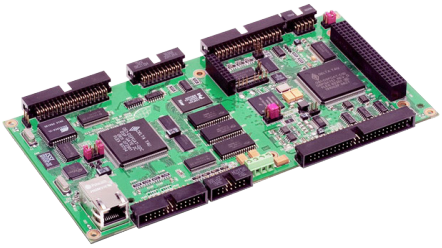

ALPHA controller

KEY FEATURES

- Ethernet or USB
- General purpose inputs / outputs
- Complete control software
- Compatible with: BORA, PUNA, BREVA, ZONDA, KUBAN, JORAN

Features	
Axis number	6 + 2 optional
Motion controller	DeltaTau Geobrick LV programmed with SYMETRIE hexapod control software
Communication	Ethernet / USB
Drive type	DC, Brushless or Stepper drivers
Encoder input	Incremental differential signals (RS-422) or high-speed serial protocol for absolute encoders (Endat or BISS)
Connectors	6x D-sub 15 pins or M17 (6 additional connectors with absolute encoders)
GPIO	2 outputs & 1 input optically isolated (D-sub 9 pins) 8 optional inputs and handwheel (D-Sub 15 pins high density)
Safety	Emergency stop input / Safe Torque Off (STO) function
Miscellanous	
Voltage	110-240 VAC / 50-60 Hz
Power	< 300 W for BORA, PUNA and BREVA DC < 750 W for BREVA ST, BREVA BL < 1000 W for ZONDA, KUBAN, JORAN ST < 1500 W for JORAN BL
Dimensions	Height (H) / Width (B) / Depth (T) (see figure on CAPELLA controller) 132.55 mm (3U) / 448.90 mm (84F) / 435.5 mm for model with power < 1000 W 177 mm (4U) / 448.90 mm (84F) / 495.5 mm for model with power < 1500 W
Mass	~ 10 kg
Operating temperature	0 °C to + 45 °C
Storage temperature	- 25 °C to + 70 °C

EnDat 2.2

BiSS INTERFACE

VEGA controller

KEY FEATURES

- Ethernet or USB
- General purpose inputs/outputs
- Complete control software
- Compatible with: SIRIUS

Features	
Axis number	6 + 2 optional
Motion controller	DeltaTau Geobrick LV programmed with SYMETRIE hexapod control software
Communication	Ethernet / USB
Drive type	Brushless drivers
Encoder input	High-speed serial protocol for absolute encoders (Endat or BISS)
Connectors	2x Harting Han 72DD
GPIO	2 outputs & 1 input optically isolated (D-sub 9 pins) 8 optional inputs and handwheel (D-Sub 15 pins high density)
Safety	Emergency stop input / Safe Torque Off (STO) function
Miscellanous	
Voltage	110-240 VAC or 400 VAC (three phases 3P + N + E) / 50-60 Hz
Power	< 1500 W on standard
Dimensions	Height (H) / Width (B) / Depth (T) 767 mm (16U) + 76 mm (castors) / 553 mm / 600 mm
Mass	< 75 kg with 110-240 VAC model < 100 kg with 400 VAC model
Operating temperature	0 °C to + 45 °C
Storage temperature	- 25 °C to + 70 °C

EnDat 2.2

BiSS INTERFACE

Controller technology

The motion controller is integrated with drive amplifiers and power supplies in an industrial control enclosure. It is the brain responsible for the hexapod control; it allows the following tasks especially:

- **Communication:** communicates with the graphical interface software or a base control system through the Application Programming Interface (API).
- **State machine:** executes a state machine, responsible for the control of the hexapod. The state machine uses the hardware inputs and data received from the Application Programming Interface (API) to determine what to do.
- **Kinematics transformations:** performs the conversion between position expressed in DOF (degrees of freedom) regarding the defined coordinate systems and actuators' lengths.
- **Coordinate systems:** transformations are calculated inside the motion controller at a low level.
- **Servo loop closure:** ensures that the position error between the target actuator position and the measured position is minimized.
- **Health monitoring:** the motion controller checks the state of hardware inputs and control loop deviations from normal operating conditions.
- **Trajectory profile generation:** the motion controller implements an interpolation algorithm to produce smooth motion with a trajectory control to guarantee low cross-coupling.
- **Validation process:** before each motion the controller checks if the requested motion is valid, considering the hexapod parameters and including safety limits.

From the user to motion:

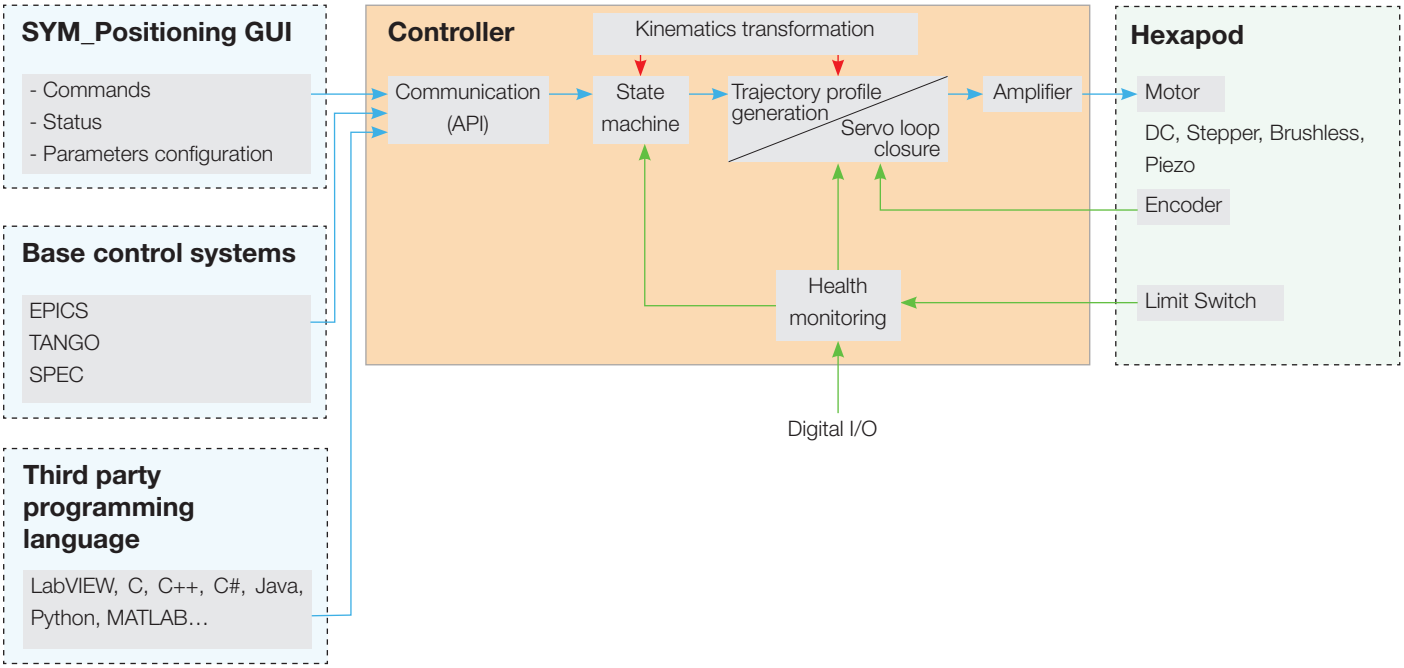

Controller technology

The control software embedded on the motion controller is developed by SYMETRIE. All functionalities necessary to control the hexapod are included, even the most advanced and complicated features. Embedded software programming is easily customizable to integrate the more complex customer application requirements (examples: integrate additional axis control, customized digital outputs, add safety sensors...).

The customers have the choice between several configurations to control the hexapod:

- **Windows Graphical User Interface (GUI): SYM_Positioning software**
- **Application Programming Interface (API):** to integrate the hexapod control into your environment
- **Base control system drivers: EPICS, TANGO, SPEC**
- **Specific programming library: LabVIEW, C, C++, C#, Java, Python, MATLAB…**

SYMETRIE controllers are based on Delta Tau motion controllers, which are the global reference for precision motion control. SYMETRIE has a strong experience in using Delta Tau products. Delta Tau controllers' main characteristics are :

- Providing structures that enable easy implementation and execution of complex kinematics calculation. This capability permits the motion for the hexapod to be programmed in the natural coordinates of the tool-tip.
- The power and flexibility of its trajectory generation algorithms.
- Performing highly sophisticated look ahead calculations on programmed trajectories. This feature will scan ahead in the programmed trajectories, looking for potential violations of its position, velocity, and acceleration limits. If it sees a violation, it will then work backward through the pre-computed buffered trajectories, slowing down the parts of these trajectories necessary to keep the moves within limits. These calculations are completed before these sections of the trajectory are actually executed.

DELTA TAU Geo Brick LV controller

SYM_Positioning software

SYM_Positioning is an ergonomic GUI software, which is well suited for the customer who does no need to integrate the hexapod in a more complicated system. All functionalities necessary to control the hexapod are included, even the most advanced and complicated features.

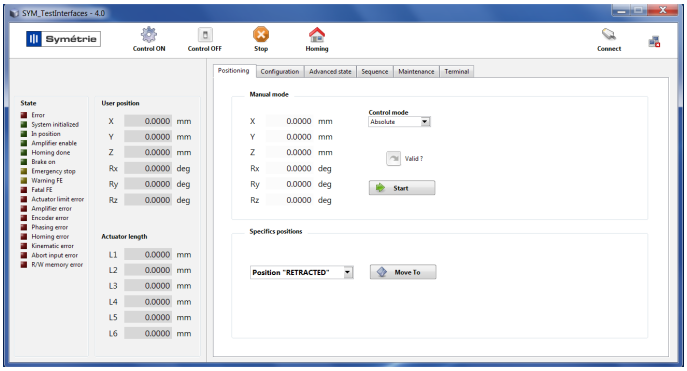

Main window allowing the user to set the target position of the hexapod.

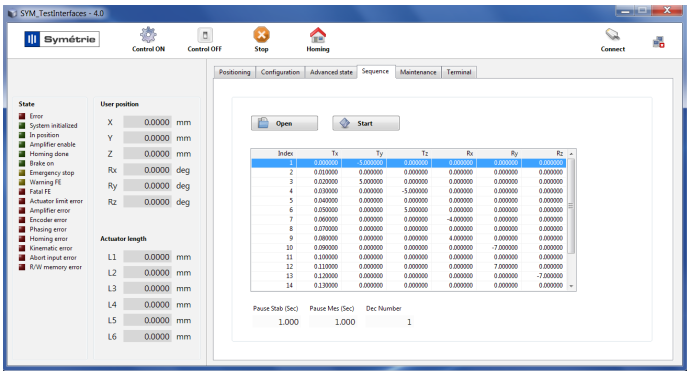

Window allowing the user to create an automated list of points for the hexapod.

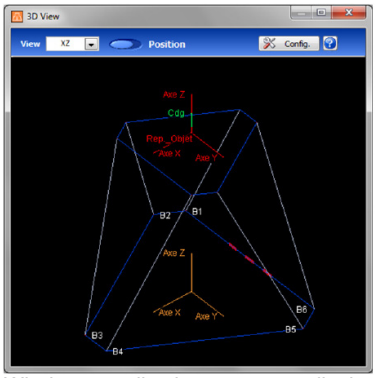

Window allowing to display the hexapod position in 3D.

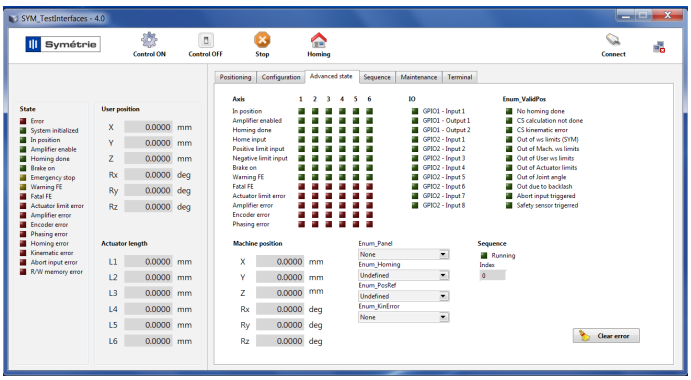

Window allowing the user to get an overview of the hexapod current state.

Hand-held control unit

A manual control unit is provided optionally with the hexapod. This unit is useful to control fine adjustments, without necessarily using the software.

Features available on this manual control unit are similar to those found on a CNC machine:

- Axis selector: Tx, Ty, Tz, Rx, Ry, Rz
- Increment size selector: 0 (hand-held disabled), x1, x10, x100, +/- (continous mode)
- J+ button: allow to realize a continuous motion in positive direction
- J- button: allow to realize a continuous motion in negative direction
- Pulse generator: wheel to control incremental motion

Application Programming Interface (API)

With the standalone configuration, in addition to the control enclosure, the system comes with a documentation about the commands necessary to communicate with the hexapod. All functionalities necessary to control the hexapod are available, even the most advanced and complicated features.

The Application Programming Interface and the controller Ethernet protocol (TCP/IP) are highly documented. This open architecture permits to integrate the hexapod control under any third party programming language (LabVIEW, C, C++, C#, Java, Python, MATLAB…).

Thanks to our recent developments, it is now possible to easily integrate the hexapod into EPICS, SPEC, or TANGO.

LabVIEW library for hexapod controller

The library features easy-to-use native LabVIEW VIs (Virtual Instruments) to control and command SYMETRIE hexapod directly from your favorite graphical development environment. With this library, you can easily and quickly integrate full hexapod control into your application and eliminate complex programming expertise. Using this approach, you do not need to learn specialized software programming skills, which means you can achieve higher performance and better results in less time.

VIs are provided to simplify the programming of the hexapod control into your application. To start using them, we assume a prior knowledge of proper LabVIEW programming techniques. Nevertheless it is not necessary to be a LabVIEW expert to use our library.

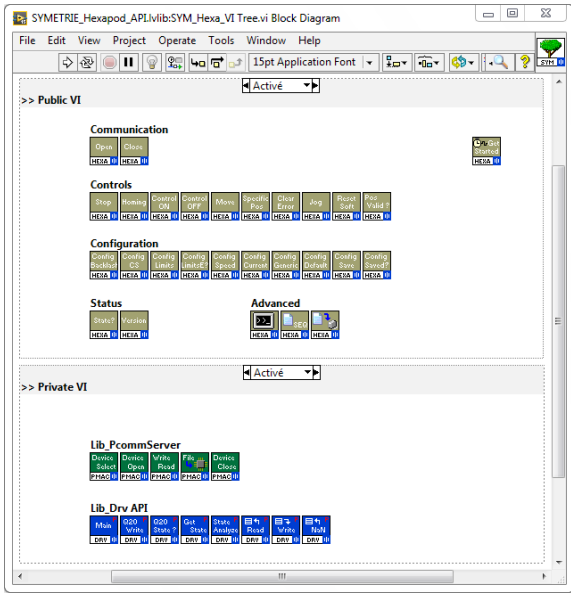

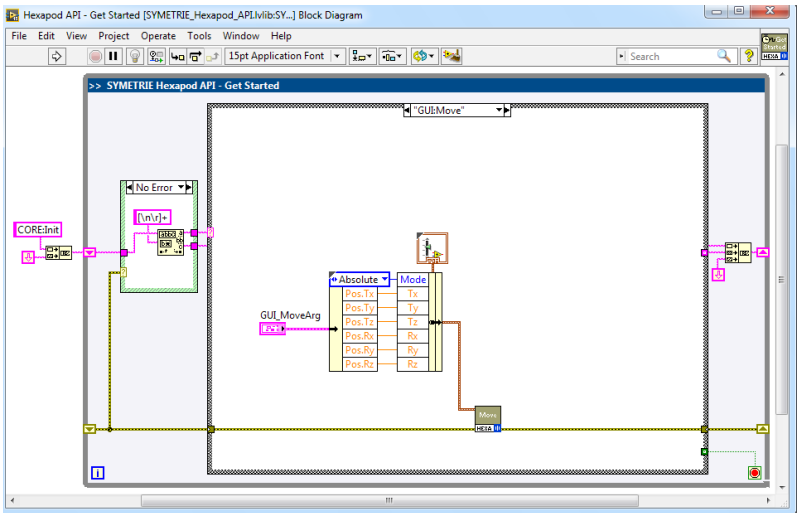

C library for hexapod controller

```c
int sym_api_VR_GETRESPONSE(SOCKET sock, char *pCmd){
    ST_API_TPMAC_ETH L_sCMD = {0};
    int L_irc = 0;

    // Build control Structure
    L_sCMD.cRequestType  = VR_DOWNLOAD;
    L_sCMD.cRequest      = VR_PMAC_GETRESPONSE;
    L_sCMD.iValue        = 0;
    L_sCMD.iIndex        = 0;
    L_sCMD.iLength       = htons(strlen(pCmd));

    // Write
    strncpy(L_sCMD.sData,pCmd,strlen(pCmd));
    L_irc = write_tpmac(sock,(char*)&L_sCMD, DEF_API_TPMAC_ETH_CMD_SIZE + strlen(pCmd));
    if (L_irc < 0){return DEF_API_TPMAC_ERR_WRITE;}

    // Read
    memset(pCmd, 0, DEF_API_TPMAC_STRING_SIZE);
    if ((L_irc = read_tpmac(sock,pCmd,DEF_API_TPMAC_STRING_SIZE))< 0){
        return DEF_API_TPMAC_ERR_READ;
    }

    // If acknowledge character '\006' is received, remove '\r''\006' from the string and return success.
    if (pCmd[L_irc-1] == '\006'){
        pCmd[L_irc-2] = '\0';
    }

    return L_irc;
}
```

The C library allows the application programmers to control the hexapod with a minimum of programming effort. With this library, the programmer has access to all hexapod controller features to create your own software or integrate it into a more application environment.

Applications: Astronomy

Ground-based telescopes are more and more powerful in order to help astronomers to see further and more accurately. As a consequence, telescopes manufacturers are looking after improved mirror positioning performances. Hexapods are used to realign the secondary mirror relatively to the primary mirror to compensate the mechanical deformations of the telescope structure due to temperature and gravity changes during the night.

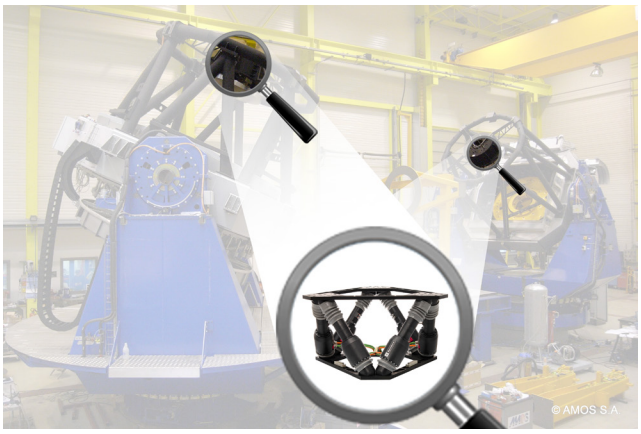

Large ground-based optical telescopes

Two SURES hexapods position secondary mirrors with a resolution of 0.5 arcsec on two large ground-based optical telescopes being manufactured by AMOS in Belgium. The payloads weigh 350 kg each and have a diameter of approximately 900 mm.

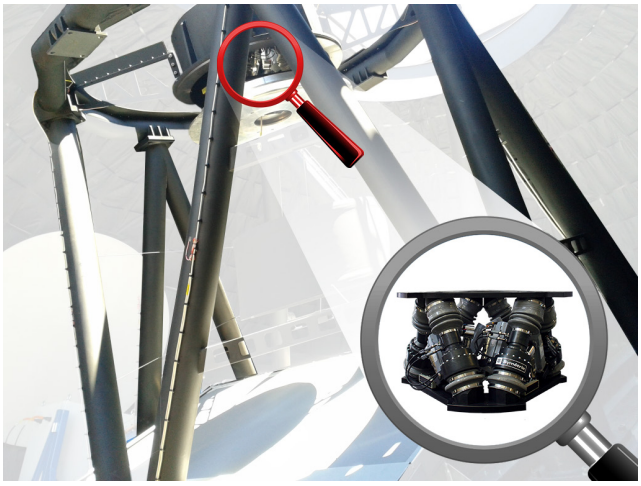

Ground-based optical telescopes

The hexapod is installed on Pan-STARRS-2 optical telescope at an altitude of 4267 m on Maui, Hawaii. Pan-STARRS-2 is operated by the Institute for Astronomy of the University of Hawaii. A small version of the SURES hexapod has been adapted as the secondary mirror is 600 mm diameter and weighs less than 110 kg.

Ground-based radio telescopes

NOEMA is the most powerful millimeter radiotelescope of the Northern Hemisphere. Located in the French Alps, it is operated by the IRAM research institute for radio astronomy. Customized hexapods with light carbon platforms are positioning the 900 mm diameter subreflectors with high precision.

Applications: Optical benches

Hexapods are particularly adequate to precisely align mirrors on satellites or to calibrate and test space optical components during mounting and testing phases.

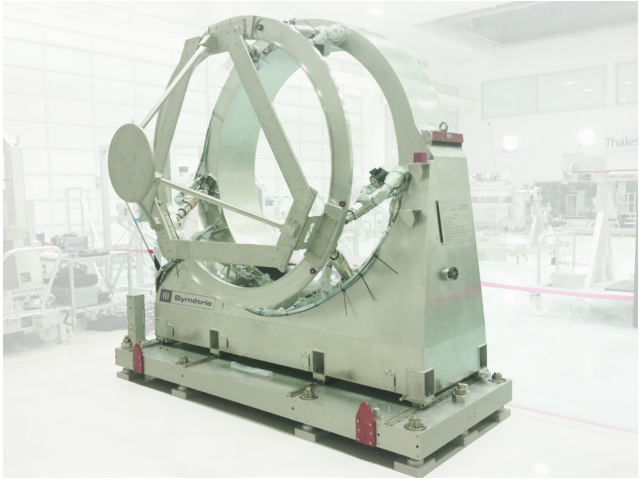

Mirror adjustment on a satellite

- Environment: high vacuum (10^{-6} mbar)
- Payload capacity: 250 kg / Hexapod height: 2.5 m
- Resolution: less than 1 µm (linear) and 2 µrad (angular)

Thales Alenia Space has to adjust a mirror during its integration on an optical satellite using five degrees of freedom (TX, TY, TZ, RX, RY) with high accuracy.

Bertin Technologies is responsible for the adjustment bench of this mirror and selected SYMETRIE's hexapod proposal. This solution based on a 3-meter-height hexapod is a technological breakthrough compared to the mounting and test equipment previously used in the space industry.

Optical integration and calibration

- High stability thanks to its conception and the use of Invar material with a low coefficient of thermal expansion
- High accuracy
- Customized platform to integrate the payload

Meteosat Third Generation (MTG) is the next fleet of meteorological satellites, which are managed by the European Space Agency (ESA) and Eumetsat.

This high rigidity and high stability hexapod has been made for integration and calibration of a space optical sensor of one of these satellites.

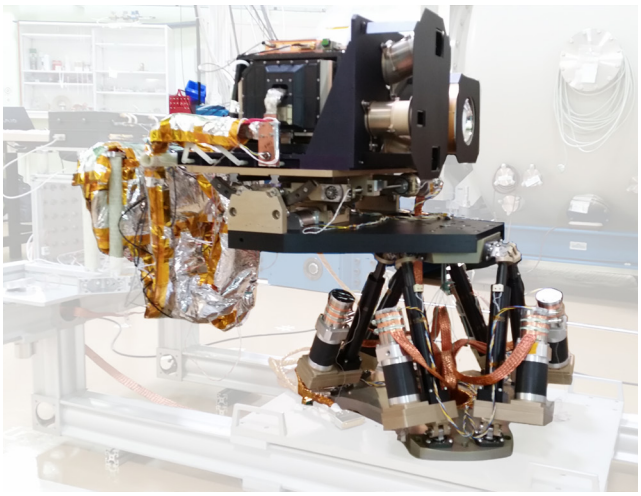

Space optical instrument calibration

- Resolution: less than 0.5 µm (linear) and 2.5 µrad (angular)
- Rigidity
- Environment: high vacuum (10^{-6} mbar)

A customized BREVA hexapod helps IAS Space Astrophysics Institute to calibrate Simbio-Sys space optical instrument, one of the major elements of the BepiColombo ESA mission dedicated to the study of Mercury.

This hexapod integrates an additional translation and a goniometer to pre-align one of the four instruments of Simbio-Sys in front of the optical source. Then the fine and precise positioning for the qualification is achieved thanks to the hexapod.

Applications: Synchrotrons

Scientists need higher precision positioning systems with several degrees of freedomin order to perform more and more demanding experiments.

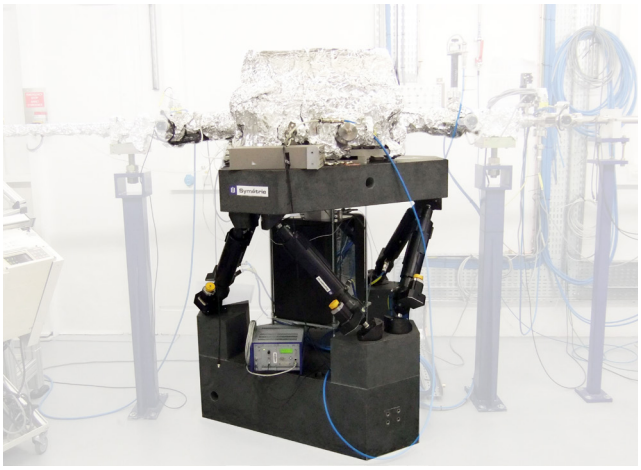

Mirror support

Developed in collaboration with the European Synchrotron ESRF (Grenoble, France), JORAN hexapod is ideal to support mirrors or vacuum chambers on synchrotrons beamlines.

The conception of JORAN, particularly of its actuators, spherical joints and natural granite platforms, ensures a great stability and guarantees the positioning quality over time.

- High angular resolution: 0.5 µrad
- High stability
- Ultra heavy load > 3 tons

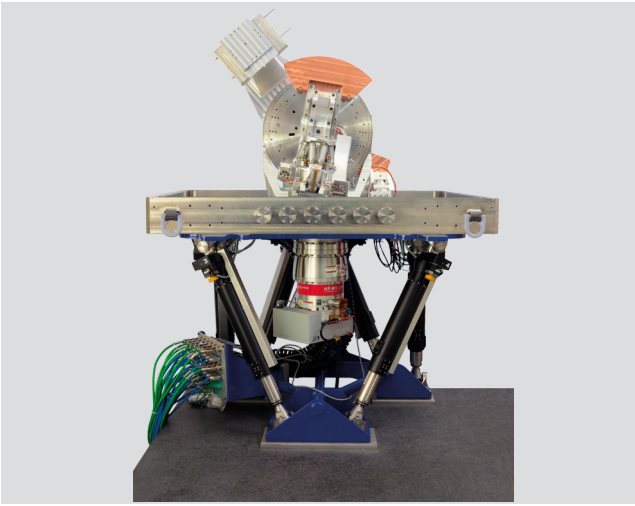

HV Diffractometer

To improve their equipment and offer new experimental capabilities, SIRIUS beamline at Synchrotron SOLEIL acquired a 10-6 mbar high vacuum diffractometer, integrating a high precision HV BORA sample positioning hexapod and four HV circles, on top of a bigger customized JORAN alignment hexapod.

- Large sample accessibility whereas the 4 circles can rotate on big travel ranges
- HV slip ring for BORA hexapod to facilitate cable management
- Control with TANGO developed in collaboration with Synchrotron SOLEIL

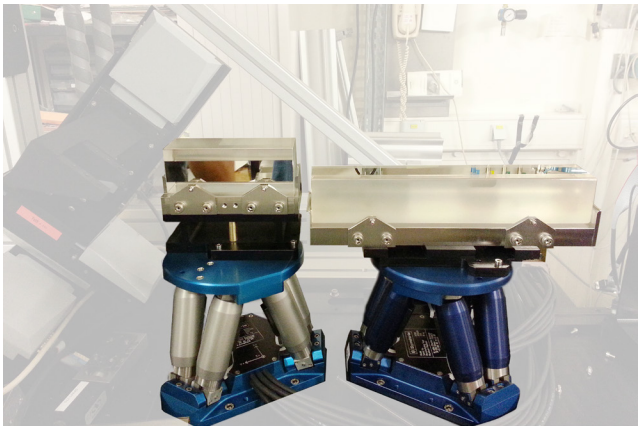

KB mirrors adjustment

The beam has to be as much focused and brilliant as possible and the scientists want to have the maximum beam time for their experiments. Therefore the KB mirrors need to be precisely positioned in a very stable way over a long time to avoid multiple realignments during experiments.
These two BORA hexapods were selected for their high stability over time.

- High resolution: 0.1 µm
- Compact size: 145 mm height
- High stability: 10 nm in Tz over 24 months

Applications: Light Sources

The precision positioning hexapods of SYMETRIE are particularly adapted for the specific precision positioning needs of particle accelerators and other research institutes.

FEL laser in-coupling

The SwissFEL is a free-electron X-ray laser, which will deliver extremely short and intense flashes of X-ray radiation. These properties will enable novel insights into the structure and dynamics of matter.

A customized JORAN hexapod is positioning the laser in-coupling chamber of the Experimental Station B.

- High resolution: 0.1 µm ; 0.5 µrad
- Heavy load: 1130 kg + 5000 N external lateral forces
- Low amplification of vibrations (Q factor)

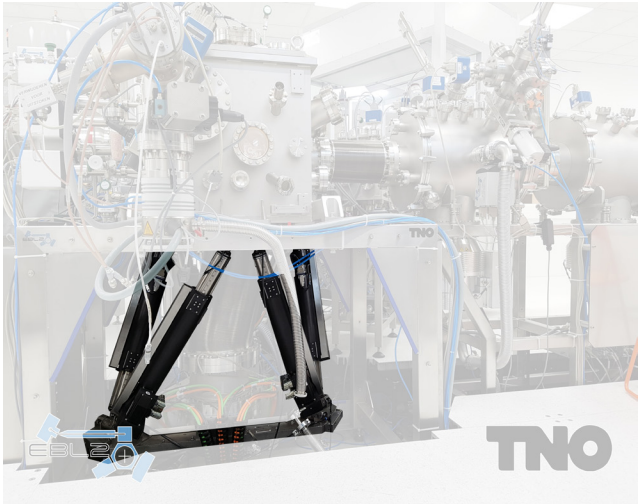

EUV Sample positioning

TNO has built an EUV (Extreme Ultra Violet) lithography facility to help the semiconductor industry in testing the EUV effects on the material and components of their future integrated circuits in order to address contamination and lifetime challenges.
A customized JORAN hexapod is positioning the sample via manipulators inside a vacuum chamber.

- Travel range: ± 110 mm ; 20° with an off-centered pivot point
- High repeatability with heavy external forces due to the bellows: ± 3 µm ; ± 0.0002°
- High accuracy : ± 5µm ; ± 0.005°

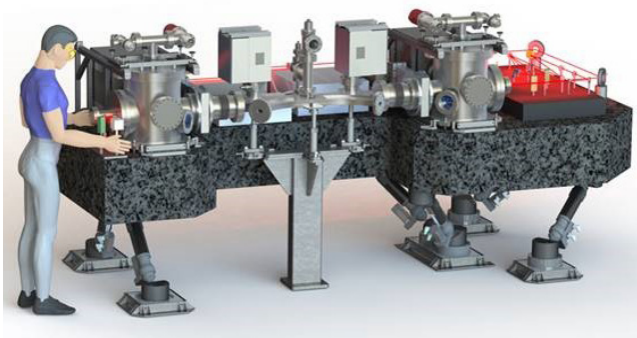

Compton light source

ThomX is a compact light source in which the Compton effect is used to produce “hard” X-rays (a few tens of keV).

A customized JORAN hexapod has been delivered to LAL (Laboratory of Linear Acceleration) in order to position the optical table, on which the cavity and the high power laser are installed.

- Highly custom asymmetric design
- Repeatability: ± 0.8 µm
- Payload: 7 tons (including granite platform)

Applications: Special projects

Our engineers are experienced to design made-to-measure hexapods with a high level of customization for very specific projects.

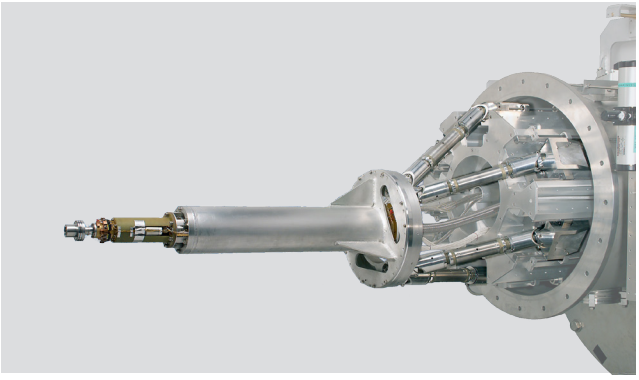

Laser MegaJoule

Laser MegaJoule (LMJ) is a large laser-based inertial confinement fusion (ICF) research device being built near Bordeaux, in France by the French nuclear science directorate, CEA.

- High precision positioning of the target in the convergence centre of 240 laser beams
- Harsh environment: high vacuum and radiations

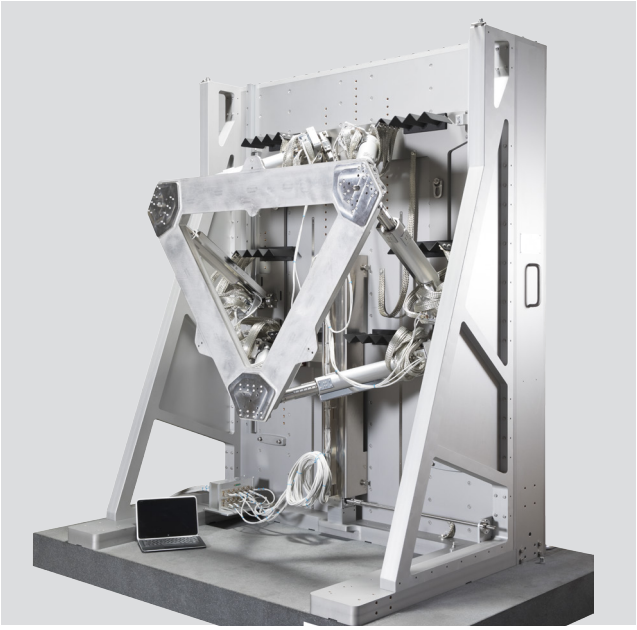

Mirror test bench

Mirrors for observation satellites have improved performances over the years. Therefore test equipment need to be more and more precise.

To qualify a large mirror a hexapod is attached to a Z stage to enable a large vertical travel range.

Actuators derived from ZONDA hexapod are very stable and thermal precautions have been taken to guarantee the thermal stability of the test equipment over time.

This system is compatible with ISO5 clean room and high vacuum.

- High angular resolution: 1 µrad
- Heavy payload: 1 ton horizontally mounted
- Small cross-talk error : ± 5 µrad over 200 mm translations
- Height of the system: 2.5m

JWST optical test bench

The James Webb Space Telescope (JWST) is the successor to Hubble. This telescope is an international collaboration between NASA, ESA and CSA.

This optical test bench was made by CEA to qualify the MIRIM (Mid Infra Red IMager) instrument of JWST.

- Two positioning hexapods: a manual one for the cryostat and a customized BREVA for the light source
- High resolution positioning: 1 µm
- SONORA and BREVA hexapods have been adapted

Glossary

Metrology

Abbe Error
A positioning or measurement error caused by parasitic rotations when a misalignment exists between the measurement axis and the point of interest. By reducing either parasitic rotations or the offset of misalignment, or both, the Abbe error can be minimized.

Accuracy
Represents how close the actual position is to the commanded position to which it is expected to move. It is affected by kinematic model error, linearity error, hysteresis, Abbe error, etc. (parameter M or A following ISO 230-2 standard).

Backlash error
Clearance or lost motion in a mechanism caused by gaps between the parts.

Cross coupling
When commanded to move on a single axis, defines the deviation of the hexapod position on the other axes.

Dimensional metrology
Science of calibrating and using physical measurement equipment to quantify the physical size of an object or the distance and angle from any given object.

Drift
A position change over time, which includes the effects of temperature change and other environmental effects. The drift may be introduced from both the mechanical system and electronics.

Hysteresis error
It is a deviation between the actual and commanded position at the point of interest caused by elastic forces and friction forces.

Repeatability
Deviation from the average of actual positions when the system is commanded several times to go at a desired position.
Repeatability is given as unidirectional repeatability in any point of the axis with ± 2 standard deviations (parameters R+ and R- following ISO 230-2 standard).

Resolution
Resolution is seen as minimum incremental motion (MIM). It is the smallest motion increment that the system is able to achieve in a consistent and detectable manner.

Stability
Defines how much the hexapod deviate from its position over time without any new command.

Stiffness
Defines how much the hexapod deforms when subject to an applied force. Stiffness is determinant to increase the natural frequency.

Straightness
Defines the deviation of the hexapod position from its trajectory when commanded to move on a straight line.

Various

Absolute encoder
An absolute encoder maintains position information when power is removed from the system. The position of the encoder is available immediately when applying power.

Application Programming Interface (API)
An API is a set of commands, functions, protocols and objects that programmers can use to create software or interact with the controller. It provides developers with standard commands for performing common operations so they do not have to write the code from scratch.

Graphical User Interface (GUI)
An intuitive interface which allows the user to control the hexapod.

Hexapod
Parallel kinematics system composed of six struts to provide motion and accuracy for positioning in the six Degrees Of Freedom (6 DOF) also called Gough-Stewart platform or Stewart platform.

Invar
Invar is a nickel–iron alloy (Fe36Ni - 64FeNi in the USA) notable for its uniquely low coefficient of thermal expansion. The name Invar comes from the word invariable, referring to its relative lack of expansion or contraction with temperature changes.

Parallel kinematics
A parallel kinematics system is a mechanical system that uses several (at least two) computer-controlled serial chains to support a single platform, or end-effector. Compared to a serial kinematics system in which each degree of freedom is dependent, the degrees of freedom in a parallel kinematics system are interdependent.

Pivot point
Center of rotation around which the hexapod moves. It can be configured virtually via software.

Six Degrees Of Freedom (6 DOF)
It refers to the freedom of movement of a body in three dimensional spaces. The body is free to move forward/backward, up/down, left/right combined with rotation about three perpendicular axes, often termed pitch, yaw and roll.

A worldwide presence

SYMETRIE hexapods locations

Distributors of SYMETRIE hexapods

SYMETRIE headquarters

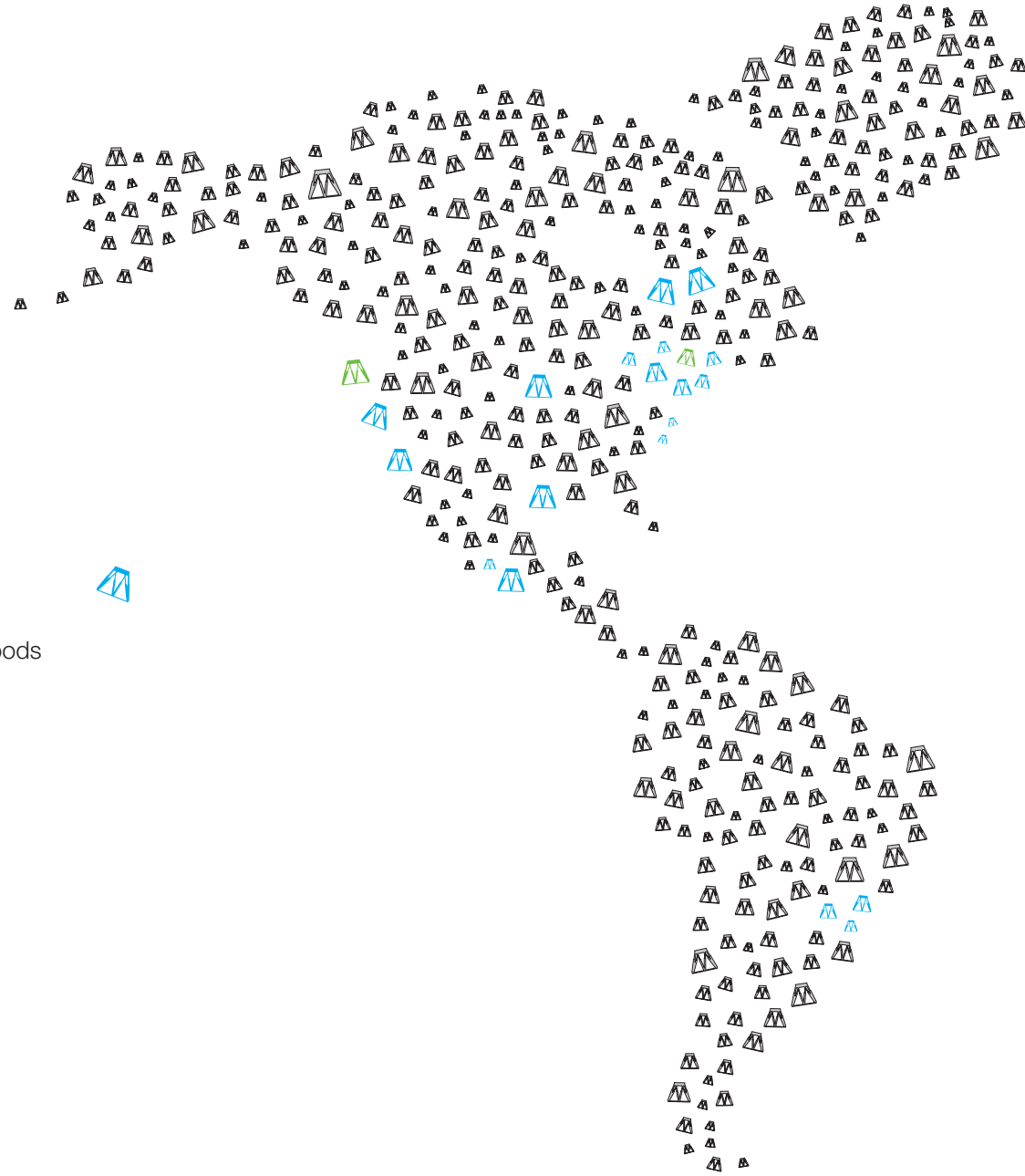

SYMETRIE

SYMETRIE

Symetrie Hexapods

Symetrie Hexapods

symetrie_hexapods

Symetrie Hexapods

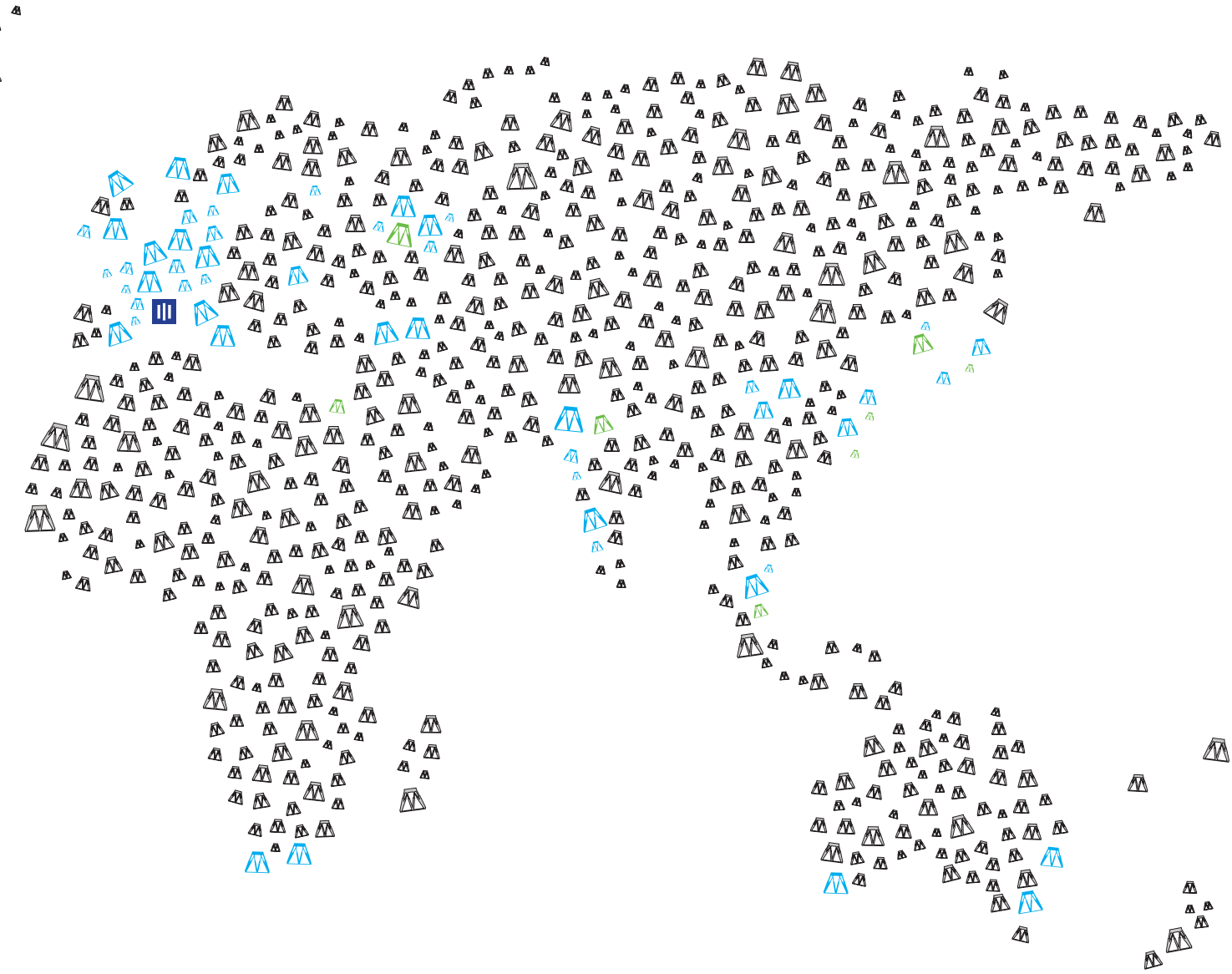

Our hexapods all over the world

HOW TO CONTACT US

SYMETRIE headquarters
10, Allee Charles Babbage
30035 Nimes Cedex 1
FRANCE
Phone: +33 (4) 66 29 43 88
Email: info@symetrie.fr
www.symetrie.fr

Symétrie

Representatives

Canada and USA

Laserand
177 Mount Vernon ave.
Montreal, QC, H8R 1K2
Canada
Phone: +1 (514) 452-4693
Email: sales@laserand.com
www.laserand.com

Canada and USA

MICRONIX USA
3506-B West Lake Center Drive
Santa Ana, CA 92704
USA
Contact: Manfred Schneider
Phone: +1 (949) 480-0538
Email: info@micronixusa.com
www.micronixusa.com

China

Motionsmart Precision Technology Co., Ltd
Building No. 3-3207F,
No. 200 Zhangheng Rd.,
Pudong, Shanghai
China 201204
Phone: +86 21-68370027
Email: info@motionsmart.cn
www.motionsmart.cn

India

SM Creative Electronics Limited
10, Electronic City, Sector 18
Gurgaon 122015 Haryana
India
Contact: Parveen Garg
Phone: +91 124 4909850
Email: parveengarg@smcel.com; smcel@smcel.com
www.smcelindia.com

Israel

Etgar Engineering
12 Hagefen st.
Har Adar 9083600
Israel
Contact: Akiva Goren
Phone: +972 52 47 32 533
Email: gorenak@netvision.net.il

Japan

TOKYO INSTRUMENTS, INC.
6-18-14 Nishikasai, Edogawa-ku,
Tokyo 134-0088
Japan
Phone: +81 3 3686 4711
Email: sales@tokyoinst.co.jp
www.tokyoinst.co.jp

Russia, Belarus, Armenia and Kazakhstan

CDP Systems Corp.
53 Leninsky Prospect
119991 Moscow
Russian Federation
Phone: +7 (499) 132 6911
Email: mfirdus@sci.lebedev.ru
www.cdpsystems.com

Singapore

Simple Technologies Private Limited
10 Anson Road
#26-04 International Plaza
Singapore 079903
Contact: Anthony Tan
Phone: +65 91691025
Email: sgmanage@simplesg.com
www.simplesg.com

South Korea

INNOTICS
562-3, Dae-Lim B / D, 207-2
Seoul
South Korea
Phone: +82 (0) 2 2276 1013
Email: inno_jhchang@naver.com
www.innotics.com

Taiwan

Titan Electro-Optics Co., Ltd.
14Fl., No. 19-11, San Chung Road
Taipei, 115,
Taiwan, R.O.C.
Contact: Garmar Pan
Phone: +886-2-2655 2200 Ext 158
Email: garmar-pan@teo.com.tw, sales@teo.com.tw
www.teo.com.tw

Version 4 - 2018